solarspan® by BONDOR

insulroof® by BONDOR

Technical

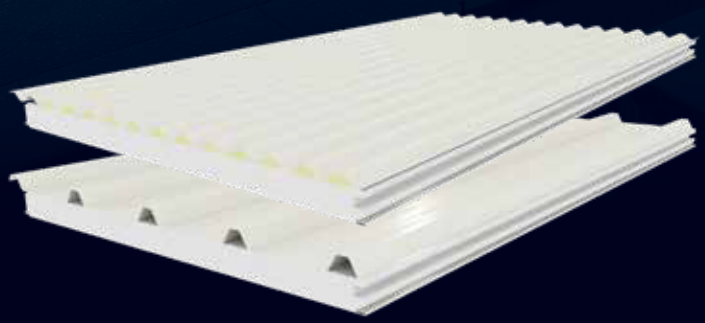

CodeMark™

Colorbond® THE COLOURS OF AUSTRALIA SINCE 1966

BONDOR®

Leaders in Thermal & Architectural Building Solutions

Patio Engineering Guide

v5 - Current 12/05/2020

Contents

Contents **2**

Technical Data **3**

Packing for Shipment 3
Delivery to Site 3
SolarSpan® Specifications 4
InsulRoof® Specifications 4

Overview **5**

Introduction 5
Example Only 5

Engineering Calculations **6**

1.0 Wind Classification **7**

1.1 Wind Region 7

2.0a SolarSpan® Panel Overview **8**

Roofing Layer 8
Ceiling Layer 8
Roof Colour Range 8
Ceiling Finishes 8
Insulation Layer 8
Dimensions 8

2.0b InsulRoof® Panel Overview **9**

Roofing Layer 9
Ceiling Layer 9
Roof Colour Range 9
Ceiling Finishes 9
Insulation Layer 9
Dimensions 9

3.0a SolarSpan® Maximum Span **10**

SolarSpan® Span Table - Domestic Patios Single Spans (mm) 10

3.0b InsulRoof® Maximum Span **11**

InsulRoof® Span Table - Domestic Patios Single Spans (mm) 11

4.0 Beam Selection **12**

4.1 Determine Load Width on Beam 12
4.2 Uplift Load on Beam Table 13

5.0 Beam Selection **14**

6.0 Posts and Footings **15**

6.1 Post Uplift 15
6.2 Post to Beam Connection 16
6.3 Post to Ground Connection 18

7.0 Patio to House Connection **20**

7.1 For Metal Fascias 20
7.2 For Timber Fascias 20
7.3 Offset Post for Application with Higher Uplift 21
7.4 Removed Fascia & Soffit 21
7.5 Brick / Masonry Wall 21
7.6 SolarSpan® Fastener Details 22
7.6 InsulRoof® Fastener Details 23

8.0 Gable Structures **24**

8.1 Thickness and Fixings 24
8.2 Select Outer Beam 24
8.3 Select Gable Beams 24
8.4 Check the Capacity of the Ridge Beam 25

9.0 Enclosure Wall Panel **26**

WARNING

Where installation of this product or system has not been undertaken strictly as per these instructions, the CodeMark certification and claims for compliance under the National Construction Code (NCC) will be deemed null and void. Where this has occurred, alternate building compliance solutions will need to be sought for the specific site.

NOTE

All technical queries related to this manual must be directed to Bondor.

Technical Data

Packing for Shipment

SolarSpan® & InsulRoof® sheets are packed to a maximum pack height of 1.2m with the number of panels per pack dependant on panel thickness, length and overall pack weight. SolarSpan® & InsulRoof® panels are manufactured with a protective film applied to the ceiling skin. SolarSpan® & InsulRoof® panels can be marked externally on the insulated core with the panel number and/or length, on request.

Delivery to Site

Panel packs should be secured using cargo straps spaced approximately every 2m with 600mm plastic cargo angles under the straps (refer to Figure 1a). Long 600mm angles must be place on top and bottom of panel pack to protect from straps. Do not overtighten straps, no depression in panel should be seen, back off on strap tension, panel skin should be flat (refer to Figure 1b). Unloading remains the client's responsibility. For lifting panels greater than 8m in length, use of a spreader bar is recommended (refer to Figures 1c & d). Refer to Figures 1e & 1f for recommended steps to unload panels of less than and greater than 8m in length. Panels should always be kept dry and if placed on site, stored off the ground, slightly inclined, allowing adequate drainage and ventilation of the panel pack.

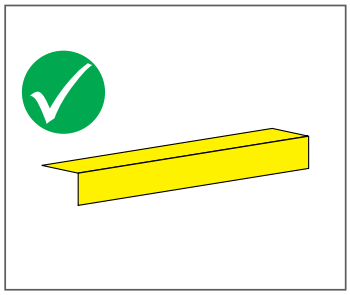

Figure 1a

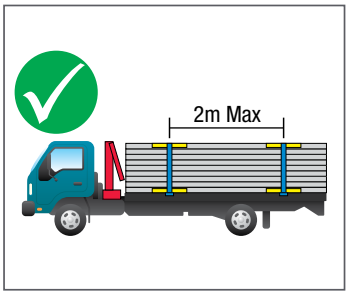

Figure 1b

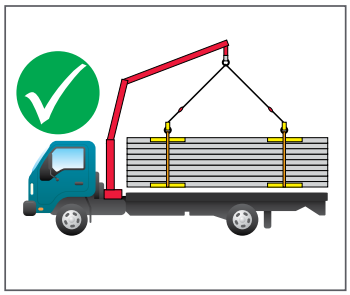

Figure 1c

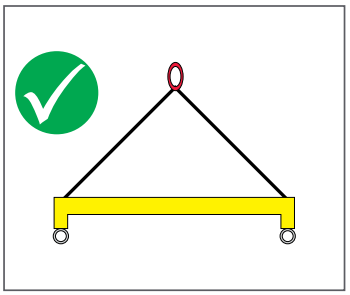

Figure 1d

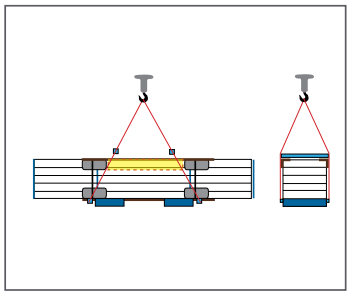

Figure 1e

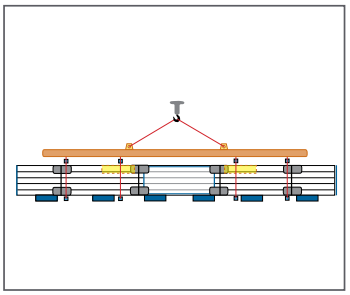

Figure 1f

Certification

MILANOVIC NEALE
CONSULTING ENGINEERS
BRISBANE OFFICE
5/63 Annerley Road, Woolloongabba QLD 4102
PO Box 8380, Woolloongabba QLD 4102
T 07 3255 1877 F 07 3255 1878
IPSWICH OFFICE
18 Canning Street, North Ipswich QLD 4305
PO Box 2118, North Ipswich QLD 4305
T 07 3281 6603 F 07 3281 6602

Andrew Morrison
RPEQ 12942

SolarSpan® Specifications

SolarSpan® is a long-spanning commercial and residential insulated roof panel system that combines roofing, EPS-FR insulation and a pre-painted ceiling in one durable, functional and attractive roof panel. This all-in-one roofing solution is manufactured using Australian-made Colorbond® steel for durability and is installed in a variety of applications including educational facilities, multi-residential housing and retail facilities and is tested for use in cyclonic regions.

Core	EPS-FR (Expanded Polystyrene with fire retardant)
Width (cover mm)	1000
Thickness (mm)	50, 75, 100, 125, 150, 175, 200
Length	Up to 24m (check for availability)
External Material	0.42mm G550 Colorbond® pre-painted steel
External Finishes	High-Rib Trapezoidal Profile
Exterior Colour Options	Classic Cream™, Surfmist®, Paperbark®, Shale Grey™, Dune®, Pale Eucalypt®, Manor Red®**, Basalt®^, Woodland Grey®^**
Internal Material	0.6mm G300 Colorbond® pre-painted steel
Internal Finishes	Plain, Elegance
Interior Colour Options	Classic Cream™, Surfmist®
Pitch	2 degree minimum, refer Bondor®
Paint System	AS/NZS 2728 & AS 1397
Accreditations	Codemark Certificate Number CM40145

Panel Properties							
Panel Thickness (mm)	50	75	100	125	150	175	200
Typical Mass (kg/m^2) based on 0.42/0.6mm skins	10.6	10.9	11.3	11.6	12.0	12.3	12.7
SL Grade Total R-value (m^{2}K/W)	1.4	2.1	2.7	3.3	3.9	4.6	5.2
M Grade Total R-value (m^{2}K/W)	1.5	2.2	2.9	3.5	4.2	4.9	5.6

Note: The above Total R-values are for insulation average temperature of 15˚C. Contact us for other temperatures and different EPS-FR core grades.

InsulRoof® Specifications

InsulRoof® is a long-spanning insulated roof panel that features a corrugated roof profile and a pre-finished steel ceiling lining encased in Bondor's new proprietary dual layered insulating core technology comprising of EPS-FR and PUR.
This all-in-one roofing solution is manufactured using Australian-made BlueScope® Colorbond® steel for durability and is ideal for a variety of applications including housing, multi-residential, commercial and industrial roofing applications where a corrugated roof profile is desired.
SupaCore® is a proprietary and world-first insulating core technology developed by Bondor® to deliver dual layers of high performance insulation and bonding strength.

Core	EPS-FR (Expanded Polystyrene with fire retardant) PUR (Polyurethane Foam)
Width (cover mm)	1000
Thickness (mm)	50, 75, 100, 125, 150, 200
Length	Up to 12m (check for availability)
External Material	0.42mm G550 Colorbond® pre-painted steel
External Finishes	Corrugated
Exterior Colour Options	Classic Cream™, Surfmist®, Paperbark®, Shale Grey™, Dune®, Pale Eucalypt®, Manor Red®**, Basalt®^, Woodland Grey®^**, Zincalume™
Internal Material	0.6mm G300 Colorbond® pre-painted steel
Internal Finishes	Plain, Elegance
Interior Colour Options	Classic Cream™, Surfmist®
Pitch	5 degree minimum
Paint System	AS/NZS 2728 & AS 1397
Accreditations	Codemark Certificate Number CM40235

Panel Properties						
Panel Thickness (mm)	50	75	100	125	150	200
Mass (kg/m^2)	11.6	11.9	12.3	12.6	13.0	13.7
SL Grade Total R-value (m^{2}K/W)	1.6	2.3	2.9	3.5	4.1	5.4
M Grade Total R-value (m^{2}K/W)	1.7	2.4	3.1	3.8	4.4	5.8

Note: The above Total R-values are for insulation average temperature of 15˚C. Contact us for other temperatures and different EPS-FR core grades.

** Conditions may apply.*
*** Limited availability.*
^ Darker colours warranted for use in limited regions. Check with your local SolarSpan® dealer for more information.

Certification

MILANOVIC NEALE
CONSULTING ENGINEERS
BRISBANE OFFICE
5/63 Annerley Road, Woolloongabba QLD 4102
PO Box 8380, Woolloongabba QLD 4102
T 07 3255 1877 F 07 3255 1878
IPSWICH OFFICE
18 Canning Street, North Ipswich QLD 4305
PO Box 2118, North Ipswich QLD 4305
T 07 3281 6603 F 07 3281 6602

Andrew Morrison
RPEQ 12942

Overview

The SolarSpan® & InsulRoof® Patio Engineering Guide and stamped local Building certification material has been provided for generic SolarSpan® & InsulRoof® patio structures only which is based on the structural capacity determined through physical testing in accordance with the relevant Australian Standards. Other products will perform differently due to differences in steel and core material selection, manufacturing methods and testing.

Introduction

This document is to be used in accordance with current Australian building standards. Please note, it is the licensed builder's responsibility to ensure structural adequacy of any existing structures are determined before attaching a SolarSpan® or InsulRoof® structure.

Please note for accurate capacity calculation, the formulas throughout this document must be completed and resulting values transposed to the Summary Table of Engineering Calculations.

Below is an example of the formula calculation boxes you will find on most sections.

Example Only

STEP 4.1: Beam Load Width								
A (patio roof span to beam) B (patio roof overhang) Load Width on beam = (0.5 x A) + B (mm)								
0.5	x	A (mm)	Equals	(0.5xA) (mm)	Plus	B (mm) Enter at Step 4	Equals	Load Width on beam (mm) Enter at Step 4.1
0.5	x	2000	=	1000	+	250	=	1250

Summary of patio information selected				
Step	Step	Page	Figure from Formula	Unit of Measurement
4.1	Determine Load Width on beam	12	1250	mm

EXAMPLE ONLY

Certification

MILANOVIC NEALE
CONSULTING ENGINEERS
BRISBANE OFFICE
5/63 Annerley Road, Woolloongabba QLD 4102
PO Box 8380, Woolloongabba QLD 4102
T 07 3255 1877 F 07 3255 1878
IPSWICH OFFICE
18 Canning Street, North Ipswich QLD 4305
PO Box 2118, North Ipswich QLD 4305
T 07 3281 6603 F 07 3281 6602

Andrew Morrison
RPEQ 12942

Engineering Calculations

Summary of patio information selected						
Step		Step	Page	Options	Enter Value	
1		Wind Classification Determination (N1, N2, N3, N4, C1, C2, C3)	7	☐ N1 ☐ C1 ☐ N2 ☐ C2 ☐ N3 ☐ C3 ☐ N4		-
2		Product & Panel Thickness	8/9	☐ SolarSpan® ☐ InsulRoof®		-
3		Case Type & Max Span	10/11	☐ Case A ☐ Case B ☐ Case C ☐ Case D ☐ Case E		mm
4 Beam	4.1	Load Width on Beam	12			mm
	4.2	Uplift Load on Beam	13			kN/m
5 Beam	5.1	Beam Type	14			-
	5.2	Beam Size	14			-
	5.3	Single or Multi-span	14			-
	5.4	Distance between Posts	14			mm
	5.5	Load Capacity	14			kN/m
6.1 Post Uplift	6.1.4	Max Uplift on Post	15			kN
6.2	6.2.1	Post to Beam Connection Type	16	☐ (A) R.H.S. Post to R.H.S. Beam Joint ☐ (B) Timber Post to Beam Joint ☐ (C) Notched Post to Roll Formed Beam Joint ☐ (D) Proprietary Systems ☐ (E) Post to Roll Formed Beam Joint Concealed Fix		-
	6.2.2	Bolt Size & Allowable Uplift on Post	16			-
6.3		Post to Ground Connection Type	18/19	☐ In Ground Footing ☐ Footing with Slab Over ☐ On Slab Footing		-
7		Patio to House Connection Type	20/21	☐ For Metal Fascias (7.1) ☐ For Timber Fascias (7.2) ☐ Offset Post (7.3) ☐ Removed Fascia (7.4) ☐ Brick/Masonry Wall (7.5)		-
8		Gable Structures	24			kN/m

Site Address			
Street	Suburb	Post Code	State

Certification

MILANOVIC NEALE
CONSULTING ENGINEERS
BRISBANE OFFICE
5/63 Annerley Road, Woolloongabba QLD 4102
PO Box 8380, Woolloongabba QLD 4102
T 07 3255 1877 F 07 3255 1878
IPSWICH OFFICE
18 Canning Street, North Ipswich QLD 4305
PO Box 2118, North Ipswich QLD 4305
T 07 3281 6603 F 07 3281 6602

Andrew Morrison
RPEQ 12942

1.0 Wind Classification

This section is a simplification of AS 4055:2012 for the selection of a design Wind Classification for residential structures (NCC class 1 or 10) up to 8.5m tall.

Refer to AS 4055:2012 for more information.

Refer to AS/NZS 1170.2:2012 for other application.

Region A Region B Region C Region D

1.1 Wind Region

Location Classification

Shielded on flat terrain in suburban area
REGION A - N1(W34), REGION B - N2 (W40)
and REGION C - C1 (W50)

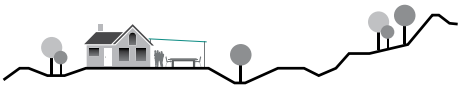

Unshielded on gentle terrain in urban area
REGION A - N3 (W50), REGION B - N4 (W61)
and REGION C - C3 (W74)

Unshielded in suburban area.
REGION A - N2 (W40), REGION B - N3 (W50) and
REGION C - C2 (W61)

Shielded on gentle terrain in suburban area
REGION A - N2 (W40), REGION B - N3 (W50) and
REGION C - C2 (W61)

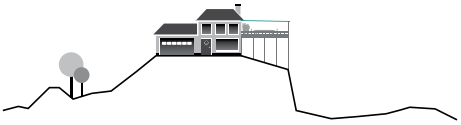

Unshielded on steep terrain in urban
on the crest of a hill
REGION A - N4 (W61)

Unshielded next to seafront
REGION A - N3 (W50), REGION B - N4 (W61)
and REGION C - C3 (W74)

Wind Classification							
Wind Region	Terrain	Terrain Type					
		Flat		Gentle		Steep	
		Shielded	Not Shielded	Shielded	Not Shielded	Shielded	Not Shielded
A	Suburban	N1	N1	N1	N2	N2	N2
	Rural	N1	N2	N2	N3	N2	N3
	Coastal	N2	N2	N2	N3	N3	N3
B	Suburban	N2	N3	N2	N3	N3	N4
	Rural	N2	N3	N3	N4	N3	N4
	Coastal	N3	N4	N3	N4	N4	N4
C	Suburban	C1	C2	C1	C3	C3	-
	Rural	C1	C2	C2	-	-	-
	Coastal	C2	C3	C2	-	-	-
D	Suburban	C2	C3	C2	-	-	-
	Rural	C3	-	C3	-	-	-
	Coastal	C3	-	-	-	-	-

Note: Suburban - Average spacing of surrounding houses or buildings 30m or less. Rural - Average spacing of surrounding houses or buildings greater than 30m. Coastal - Within 500mm of the ocean or large body of water larger than 10km in any direction. Flat - less than 1:20 surrounding slopes. Gentle - Between 1:20 and 1:1 surrounding slopes. Steel - Between 1:10 and 1:7.5 surrounding slopes.

STEP 1: Wind condition at site (N2, etc)					
Find location. Determine Region.					
City	Surburb	Wind Region	Terrain Type	Shielding	Wind Classification Enter at Step 1

Certification

MILANOVIC NEALE
CONSULTING ENGINEERS
BRISBANE OFFICE
5/63 Annerley Road, Woolloongabba QLD 4102
PO Box 8380, Woolloongabba QLD 4102
T 07 3255 1877 F 07 3255 1878
IPSWICH OFFICE
18 Canning Street, North Ipswich QLD 4305
PO Box 2118, North Ipswich QLD 4305
T 07 3281 6603 F 07 3281 6602

Andrew Morrison
RPEQ 12942

2.0a SolarSpan® Panel Overview

Roofing Layer

- Superior low pitch of 2° minimum
- Available in thermally efficient and modern colours
- Australian made and proven Colorbond® steel

Ceiling Layer

- Plain ceiling underside pre-finished in Surfmist® or Classic Cream™*
- Two ceiling finish options in Plain or Elegance*
- Low maintenance and durable Colorbond® steel

Insulation Layer

- Outstanding thermal performance with CorePlus® EPS-FR Insulation
- Choose from 50 (R1.4), 75 (R2.1), 100 (R2.7), 125, (R3.3), 150 (R3.9), 175 (R4.6) & 200mm (R5.2) core thicknesses
- Service cabling ducts for ceiling lights and fans

Roof Colour Range

SolarSpan's colour range has been rigorously tested and hand picked with the support of BlueScope® Steel to offer roofing colours with the best thermal performance, made tough for Australian conditions.

Surfmist® | Paperbark® | Classic Cream™* | Pale Eucalypt® | Manor Red®** | Dune® | Shale Grey® | Basalt®^ | Woodland Grey®^**

Ceiling Finishes

SolarSpan's ceiling layer is made from proven BlueScope Colorbond® steel, available pre-finished in Surfmist® (offwhite) or Classic Cream*. Select from two popular ceiling underside finishes in either Plain or Elegance* that complement the home and offer stylish design options for your outdoor area.

Plain - Contemporary Look

The 'Plain ceiling finish is a popular smooth ceiling surface option that embodies contemporary design, suitable for the modern home.

Elegance* - Heritage Look

The 'Elegance' ceiling finish delivers a 'VJ' look with distinct lines that emulate the look and feel of a heritage style home.

Dimensions

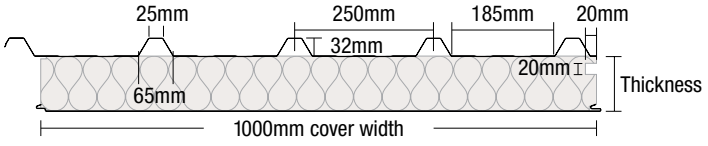

Conditions may apply.
*** Limited availability.*
^ Darker colours warranted for use in limited regions. Check with your local SolarSpan® dealer for more information.

Certification

MILANOVIC NEALE
CONSULTING ENGINEERS
BRISBANE OFFICE
5/63 Annerley Road, Woolloongabba QLD 4102
PO Box 8380, Woolloongabba QLD 4102
T 07 3255 1877 F 07 3255 1878
IPSWICH OFFICE
18 Canning Street, North Ipswich QLD 4305
PO Box 2118, North Ipswich QLD 4305
T 07 3281 6603 F 07 3281 6602

Andrew Morrison
RPEQ 12942

2.0b InsulRoof® Panel Overview

Roofing Layer

- Superior low pitch of 5° minimum
- Available in thermally efficient and modern colours
- Australian made and proven Colorbond® steel

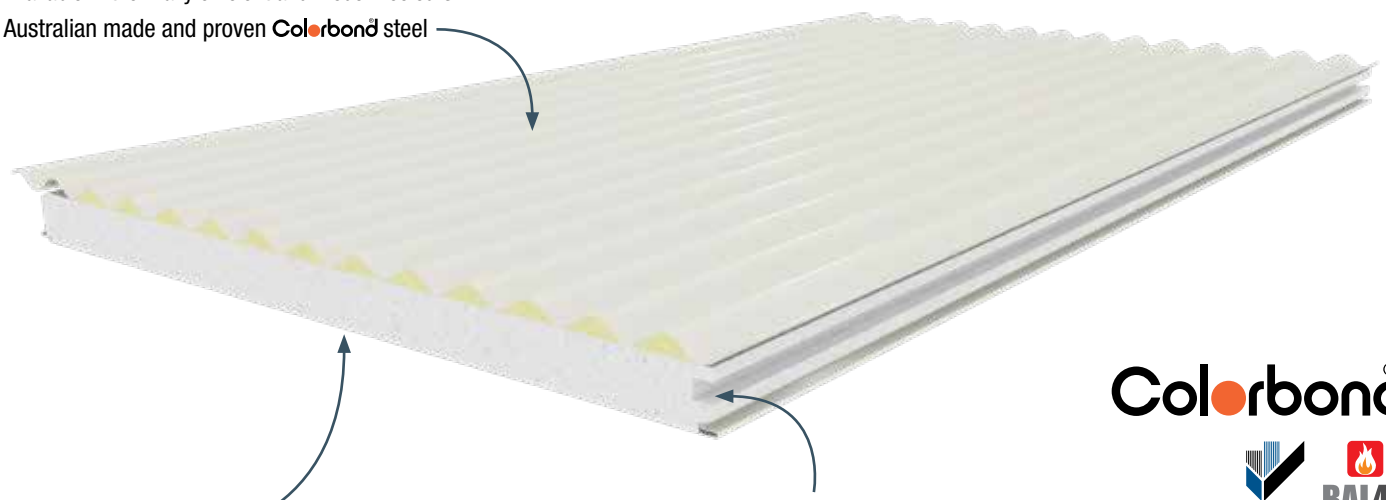

Ceiling Layer

- Plain ceiling underside pre-finished in Surfmist® or Classic Cream™
- Two ceiling finish options in Plain or Elegance*
- Low maintenance and durable Colorbond® steel

Insulation Layer

- SupaCore® dual insulation with CorePlus® EPS-FR for superior thermal performance
- Choose from 50 (R1.6), 75 (R2.3), 100 (R2.9), 125, (R3.5), 150 (R4.1), 200mm (R5.4) core thicknesses
- Service cabling ducts for ceiling lights and fans

Roof Colour Range

InsulRoof's colour range has been rigorously tested and hand picked with the support of BlueScope® Steel to offer roofing colours with the best thermal performance, made tough for Australian conditions.

Surfmist® | Paperbark® | Classic Cream™* | Pale Eucalypt® | Manor Red®** | Dune® | Shale Grey® | Basalt®^ | Woodland Grey®^** | Zincalume™

Ceiling Finishes

InsulRoofs ceiling layer is made from proven BlueScope Colorbond® steel, available pre-finished in Surfmist® (offwhite) or Classic Cream. Select from two popular ceiling underside finishes in either Plain or Elegance* that complement the home and offer stylish design options for your outdoor area.

Plain - Contemporary Look

The 'Plain ceiling finish is a popular smooth ceiling surface option that embodies contemporary design, suitable for the modern home.

Elegance* - Heritage Look

The 'Elegance' ceiling finish delivers a 'VJ' look with distinct lines that emulate the look and feel of a heritage style home.

Dimensions

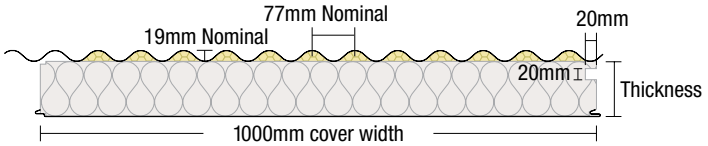

Conditions may apply.
*** Limited availability.*
^ Darker colours warranted for use in limited regions. Check with your local SolarSpan® dealer for more information.

Certification

MILANOVIC NEALE
CONSULTING ENGINEERS
BRISBANE OFFICE
5/63 Annerley Road, Woolloongabba QLD 4102
PO Box 8380, Woolloongabba QLD 4102
T 07 3255 1877 F 07 3255 1878
IPSWICH OFFICE
18 Canning Street, North Ipswich QLD 4305
PO Box 2118, North Ipswich QLD 4305
T 07 3281 6603 F 07 3281 6602

Andrew Morrison
RPEQ 12942

3.0a SolarSpan® Maximum Span

Select the SolarSpan® panel thickness from the Span Table below for the Wind Classification at the site (refer to building inspector if required) and the number of side enclosed under the roof (Case A to E).

Case A 3 Open Sides	Case B 2 Open Sides	Case C 1 Open Side	Case D Fully Enclosed	Case E Free Standing

SolarSpan® Span Table - Domestic Patios Single Spans (mm)

		Case A 3 Open Sides		Case B 2 Open Sides		Case C 1 Open Side		Case D Fully Enclosed		Case E Free Standing	
Wind Category	Panel Thickness (mm)	A Max. Span	B Max. Overhang	A Max. Span	B Max. Overhang	A Max. Span	B Max. Overhang	A Max. Span	B Max. Overhang	A Max. Span	B Max. Overhang
N1	50	5600	1400	5550	1400	5000	1250	5250	1300	5600	1400
	75	7100	1800	6500	1650	5850	1450	6150	1550	7100	1800
	100	8000	2000	7350	1850	6650	1650	6950	1750	8000	2000
	125	8750	2200	8150	2050	7350	1850	7700	1950	8700	2200
	150	9500	2400	8850	2200	7950	2000	8400	2100	9500	2400
	200	10750	2700	10150	2550	9100	2300	9600	2400	10750	2700
N2	50	5600	1400	4600	1150	4150	1050	4350	1100	5600	1400
	75	6850	1700	5400	1350	4900	1250	5150	1300	7100	1800
	100	7700	1950	6100	1550	5550	1400	5800	1450	8000	2000
	125	8300	2100	6750	1700	6100	1550	6400	1600	8700	2200
	150	9100	2300	7350	1850	6650	1650	6950	1750	9500	2400
	200	10100	2550	8400	2100	7600	1900	7950	2000	10500	2650
N3	50	4850	1200	3600	900	3300	850	3450	850	5100	1300
	75	5700	1450	4250	1050	3850	950	4050	1000	6000	1500
	100	6400	1600	4800	1200	4350	1100	4550	1150	6750	1700
	125	7050	1750	5300	1350	4800	1200	5050	1250	7400	1850
	150	7650	1900	5750	1450	5200	1300	5450	1350	8000	2000
	200	8650	2150	6550	1650	5950	1500	6250	1550	9100	2300
N4	50	3900	1000	2950	750	2700	700	2800	700	4100	1050
	75	4550	1150	3450	850	3150	800	3300	850	4800	1200
	100	5150	1300	3900	1000	3550	900	3700	950	5450	1350
	125	5700	1450	4300	1100	3900	1000	4100	1050	6000	1500
	150	6200	1550	4650	1150	4250	1050	4450	1100	6500	1650
	200	7050	1750	5300	1350	4850	1200	5050	1250	7450	1850
C1	50	4900	900	3600	900	3300	800	2600	600	4900	900
	75	5900	1200	4600	1100	3900	900	3100	700	5900	1200
	100	6900	1300	5000	1200	4500	1000	3700	900	6900	1300
	125	7700	1400	5600	1300	5100	1100	4100	1000	7700	1400
	150	8800	1400	6600	1400	5900	1400	6200	1400	8800	1400
C2	50	4000	800	2900	600	2700	600	2000	450	4000	800
	75	4800	1000	3500	700	3100	700	2000	500	4800	1000
	100	5600	1100	4100	800	3700	800	2700	600	5600	1100
	125	6300	1200	4600	900	4200	900	3000	700	6300	1200
	150	7100	1400	5300	1300	4800	1200	5100	1200	7100	1400
C3	50	3300	800	2400	600	2000	450	N/A	N/A	3300	800
	75	4000	1000	2500	600	2100	500	N/A	N/A	4000	1000
	100	4600	1100	3300	800	2800	600	1900	450	4600	1100
	125	5200	1200	3700	900	3100	700	2000	500	5200	1200
	150	5700	1400	4300	1000	3900	900	4100	1000	5700	1400

Note:
1. Applies to SolarSpan® patio covers attached to highset and lowset houses only.
2. Overhangs must not exceed immediate backspan by 25%.
3. For free-standing awnings it is acceptable to use 'Case A - 3 Open Sides', given that it is not blocked under.
4. The design for supporting members of free-standing awnings, including beams, posts and footings, need to be checked separately for strength, serviceability and stability.
5. Spans to be reduced by 10% when using SolarSpan® NatureLite® skylight.
6. Minimum of two full SolarSpan® panels between SolarSpan® NatureLite® skylight.
7. No foot-traffic on SolarSpan® NatureLite® skylight.
8. SolarSpan® NatureLite® skylight only acceptable in Non-Cyclonic regions. SolarSpan® NatureLite® skylight not to be used in Cyclonic regions.

STEP 3: SolarSpan® Max Roof Span				
Determine Max Roof Span				
Product	Panel Thickness	Case Type	Wind Classification	Max Span (mm) Enter at Step 3

Certification

MILANOVIC NEALE
CONSULTING ENGINEERS
BRISBANE OFFICE
5/63 Annerley Road, Woolloongabba QLD 4102
PO Box 8380, Woolloongabba QLD 4102
T 07 3255 1877 F 07 3255 1878
IPSWICH OFFICE
18 Canning Street, North Ipswich QLD 4305
PO Box 2118, North Ipswich QLD 4305
T 07 3281 6603 F 07 3281 6602

Andrew Morrison
RPEQ 12942

3.0b InsulRoof® Maximum Span

Select the InsulRoof® panel thickness from the Span Table below for the Wind Classification at the site (refer to building inspector if required) and the number of side enclosed under the roof (Case A to E).

Case A 3 Open Sides	Case B 2 Open Sides	Case C 1 Open Side	Case D Fully Enclosed	Case E Free Standing

InsulRoof® Span Table - Domestic Patios Single Spans (mm)

		Case A 3 Open Sides		Case B 2 Open Sides		Case C 1 Open Side		Case D Fully Enclosed		Case E Free Standing	
Wind Category	Panel Thickness (mm)	A Max. Span	B Max. Overhang	A Max. Span	B Max. Overhang	A Max. Span	B Max. Overhang	A Max. Span	B Max. Overhang	A Max. Span	B Max. Overhang
N1	50	6000	1500	5850	1450	5250	1300	5500	1400	6000	1500
	75	7150	1800	6950	1750	6250	1550	6550	1650	7150	1800
	100	8150	2050	7950	2000	7150	1800	7500	1900	8150	2050
	125	9000	2250	8800	2200	7900	2000	8350	2100	9000	2250
	150	9850	2450	9650	2400	8650	2150	9100	2300	9850	2450
	200	11300	2850	11100	2800	9950	2500	10500	2650	11300	2850
N2	50	5600	1400	4850	1200	4350	1100	4550	1150	5600	1400
	75	7100	1800	5750	1450	5200	1300	5350	1350	7100	1800
	100	7700	1950	6600	1650	5950	1500	5690	1400	7700	1950
	125	8300	2100	7300	1850	6600	1650	6400	1600	8500	2150
	150	9100	2300	7950	2000	7200	1800	6900	1750	9100	2300
	200	10100	2550	9150	2300	8250	2050	7800	1950	10100	2550
N3	50	5000	1250	3800	950	3450	850	3600	900	5350	1350
	75	6000	1500	4500	1150	4100	1050	4300	1100	6400	1600
	100	6800	1700	5150	1300	4650	1150	4900	1250	7300	1850
	125	7550	1900	5700	1450	5150	1300	5400	1350	8100	2050
	150	8250	2050	6200	1550	5650	1400	5900	1500	8850	2200
	200	9500	2400	7150	1800	6500	1650	6800	1700	10200	2550
N4	50	4000	1000	3050	750	2800	700	2900	750	4300	1100
	75	4800	1200	3650	900	3300	850	3450	850	5100	1300
	100	5450	1350	4150	1050	3800	950	3950	1000	5850	1450
	125	6050	1500	4600	1150	4200	1050	4400	1100	6450	1600
	150	6600	1650	5050	1250	4550	1150	4800	1200	7050	1750
	200	7600	1900	5750	1450	5250	1300	5500	1400	8100	2050
C1	50	4250	1050	3650	900	3300	850	3000	750	4450	1100
	75	5050	1250	4350	1100	3950	1000	3600	900	5300	1350
	100	5700	1450	4950	1250	4500	1150	4100	1050	6000	1500
	125	6350	1600	5500	1400	5000	1250	4550	1150	6650	1650
	150	6900	1750	6000	1500	5450	1350	4950	1250	7250	1800
C2	50	3550	900	2950	750	2700	700	2450	600	3750	950
	75	4250	1050	3550	900	3200	800	2900	750	4450	1100
	100	4800	1200	4000	1000	3650	900	3350	850	5050	1250
	125	5300	1350	4450	1100	4050	1000	3700	950	5600	1400
	150	5800	1450	4850	1200	4400	1100	4000	1000	6100	1550
C3	50	2950	750	2400	600	2200	550	2000	500	3150	800
	75	3550	900	2900	750	2650	650	2400	600	3750	950
	100	4000	1000	3300	850	3000	750	2750	700	4250	1050
	125	4450	1100	3650	900	3300	850	3000	750	4700	1200
	150	4850	1200	3950	1000	3600	900	3300	850	5100	1300

Note:
1. Applies to InsulRoof patio covers attached to highset and lowset houses only.
2. Overhangs must not exceed immediate backspan by 25%.
3. Case A shall have a minimum panel span of 1.5 times that of the panel height from floor height (e.g. 2m height = 3m minimum span).
4. For free-standing awnings it is acceptable to use 'Case A - 3 Open Sides', given that it is not blocked under.
5. The design for supporting members of free-standing awnings, including beams, posts and footings, need to be checked separately for strength, serviceability and stability.

STEP 3: InsulRoof® Max Roof Span				
Determine Max Roof Span				
Product	Panel Thickness	Case Type	Wind Classification	Max Span (mm) Enter at Step 3

Certification

MILANOVIC NEALE
CONSULTING ENGINEERS
BRISBANE OFFICE
563 Annerley Road, Woolloongabba QLD 4102
PO Box 8380, Woolloongabba QLD 4102
T 07 3255 1877 F 07 3255 1878
IPSWICH OFFICE
18 Canning Street, North Ipswich QLD 4305
PO Box 218, North Ipswich QLD 4305
T 07 3281 6603 F 07 3281 6602

Andrew Morrison
RPEQ 12942

4.0 Beam Selection

4.1 Determine Load Width on Beam

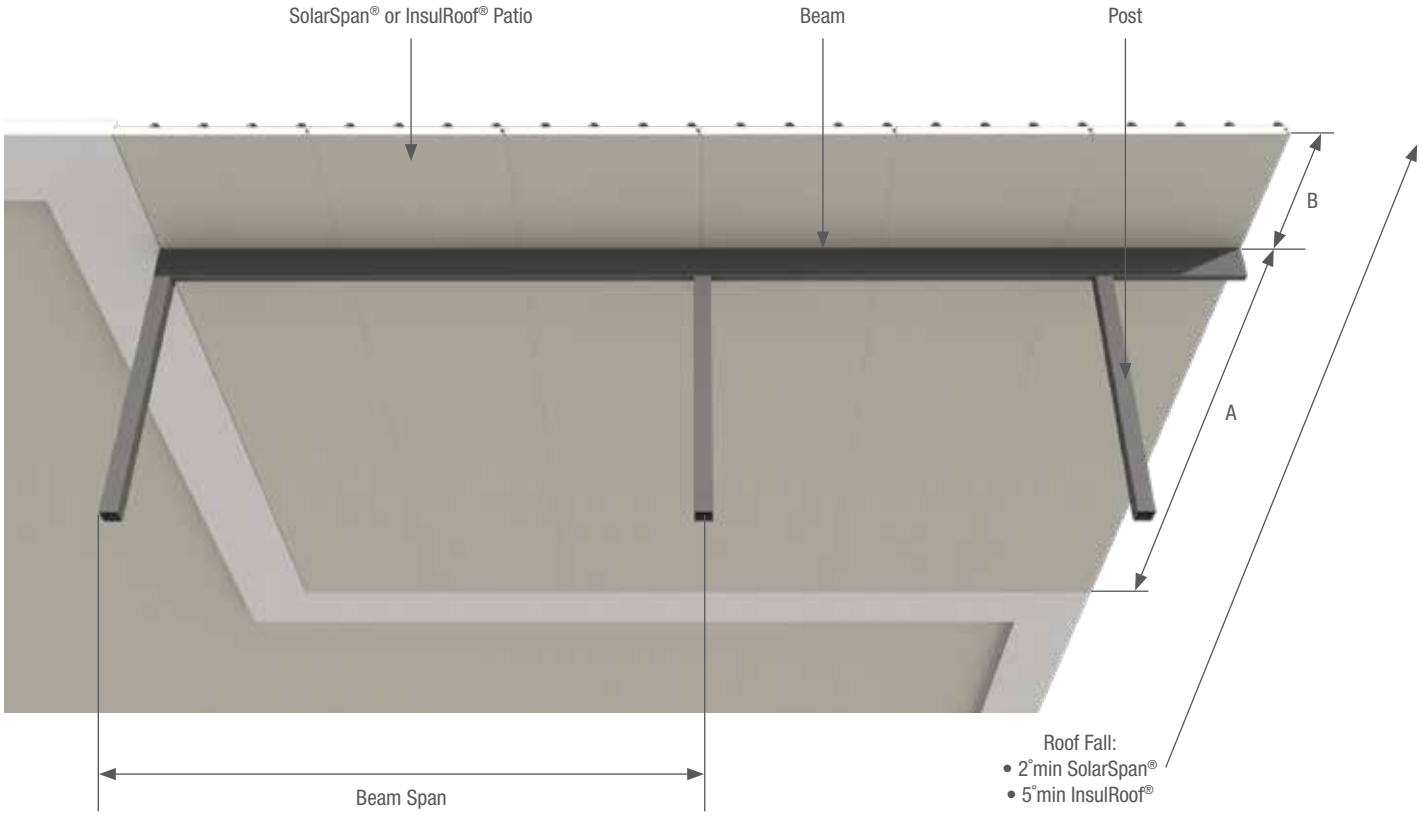

STEP 4.1: Beam Load Width								
A (patio roof span to beam) B (patio roof overhang) Load Width on beam = (0.5 x A) + B (mm)								
0.5	x	A (mm)	Equals	(0.5xA) (mm)	Plus	B (mm) Enter at Step 4	Equals	Load Width on beam (mm) Enter at Step 4.1
0.5	x		=		+		=	

Certification

MILANOVIC NEALE
CONSULTING ENGINEERS
BRISBANE OFFICE
5163 Annerley Road,Woolloongabba QLD 4102
PO Box 8380,Woolloongabba QLD 4102
T 07 3255 1877 F 07 3255 1878
IPSWICH OFFICE
18 Canning Street, North Ipswich QLD 4305
PO Box 2118, North Ipswich QLD 4305
T 07 3281 6603 F 07 3281 6602

Andrew Morrison
RPEQ 12942

4.2 Uplift Load on Beam Table

Use the Load Width from (4.1) to select the Uplift Load on Beam (kN/m) from the table below for the particular Wind Classification and enclosure case (A, B, C & D). Enter at Step 4.2.

Wind Category	Load Width (mm)	Uplift Load on Beam (kN/m)				
		Case A 3 Open Sides	Case B 2 Open Sides	Case C 1 Open Side	Case D Fully Enclosed	Case E Free Standing
N1/N2 (W55N)	1500	0.91	1.73	2.07	2.23	0.91
	2100	1.28	2.42	2.9	3.12	1.28
	2700	1.64	3.11	3.73	4.02	1.64
	3300	2.01	3.8	4.56	4.91	2.01
	3900	2.37	4.49	5.39	5.8	2.37
	4500	2.73	5.18	6.22	6.7	2.73
	5100	3.1	5.88	7.05	7.59	3.1
	5700	3.46	6.57	7.88	8.48	3.46
	6300	3.83	7.26	8.71	9.37	3.83
	6900	4.19	7.95	9.54	10.27	4.19
	7500	4.56	8.64	10.37	11.16	4.56
	8100	4.92	9.33	11.2	12.05	4.92
	8700	5.29	10.02	12.03	12.95	5.29
	9000	5.47	10.37	12.44	13.39	5.47
	9600	5.83	11.06	13.27	14.28	5.83
N3 (W41N)	1500	1.42	2.7	3.24	3.49	1.42
	2100	1.99	3.78	4.54	4.88	1.99
	2700	2.56	4.86	5.83	6.28	2.56
	3300	3.13	5.94	7.13	7.67	3.13
	3900	3.7	7.02	8.42	9.07	3.7
	4500	4.27	8.1	9.72	10.46	4.27
	5100	4.84	9.18	11.02	11.86	4.84
	5700	5.41	10.26	12.31	13.25	5.41
	6300	5.98	11.34	13.61	14.65	5.98
	6900	6.55	12.42	14.9	16.04	6.55
	7500	7.12	13.5	16.2	17.44	7.12
	8100	7.69	14.58	17.5	18.83	7.69
	8700	8.26	15.66	18.79	20.23	8.26
	9000	8.55	16.2	19.44	20.93	8.55
	9600	9.12	17.28	20.74	22.32	9.12
N4 (W50N)	1500	2.12	4.01	4.82	5.18	2.12
	2100	2.96	5.62	6.74	7.26	2.96
	2700	3.81	7.23	8.67	9.33	3.81
	3300	4.66	8.83	10.6	11.41	4.66
	3900	5.51	10.44	12.52	13.48	5.51
	4500	6.35	12.04	14.45	15.55	6.35
	5100	7.2	13.65	16.38	17.63	7.2
	5700	8.05	15.25	18.3	19.7	8.05
	6300	8.89	16.86	20.23	21.78	8.89
	6900	9.74	18.46	22.16	23.85	9.74
	7500	10.59	20.07	24.08	25.92	10.59
	8100	11.43	21.68	26.01	28	11.43
	8700	12.28	23.28	27.94	30.07	12.28
	9000	12.7	24.08	28.9	31.11	12.7
	9600	13.55	25.69	30.83	33.18	13.55

Wind Category	Load Width (mm)	Uplift Load on Beam (kN/m)				
		Case A 3 Open Sides	Case B 2 Open Sides	Case C 1 Open Side	Case D Fully Enclosed	Case E Free Standing
C1 (W41C)	1500	1.42	2.7	3.24	4.86	1.42
	2100	1.98	3.78	4.54	6.8	1.98
	2700	2.55	4.86	5.83	8.75	2.55
	3300	3.12	5.94	7.13	10.69	3.12
	3900	3.69	7.02	8.42	12.64	3.69
	4500	4.25	8.1	9.72	14.58	4.25
	5100	4.82	9.18	11.02	16.52	4.82
	5700	5.39	10.26	12.31	18.47	5.39
	6300	5.95	11.34	13.61	20.41	5.95
	6900	6.52	12.42	14.9	22.36	6.52
	7500	7.09	13.5	16.2	24.3	7.09
	8100	7.65	14.58	17.5	26.24	7.65
	8700	8.22	15.66	18.79	28.19	8.22
	9000	8.5	16.2	19.44	29.16	8.5
	9600	9.07	17.28	20.74	31.1	9.07
C2 (W50C)	1500	2.11	4.01	4.82	7.23	2.11
	2100	2.95	5.62	6.74	10.12	2.95
	2700	3.79	7.23	8.67	13.01	3.79
	3300	4.64	8.83	10.6	15.9	4.64
	3900	5.48	10.44	12.52	18.79	5.48
	4500	6.32	12.04	14.45	21.68	6.32
	5100	7.16	13.65	16.38	24.57	7.16
	5700	8.01	15.25	18.3	27.46	8.01
	6300	8.85	16.86	20.23	30.35	8.85
	6900	9.69	18.46	22.16	33.24	9.69
	7500	10.54	20.07	24.08	36.13	10.54
	8100	11.38	21.68	26.01	39.02	11.38
	8700	12.22	23.28	27.94	41.91	12.22
	9000	12.64	24.08	28.9	43.35	12.64
	9600	13.49	25.69	30.83	46.24	13.49
C3 (W60C)	1500	3.1	5.9	7.08	10.63	3.1
	2100	4.34	8.27	9.92	14.88	4.34
	2700	5.58	10.63	12.75	19.13	5.58
	3300	6.82	12.99	15.59	23.38	6.82
	3900	8.06	15.35	18.42	27.63	8.06
	4500	9.3	17.71	21.25	31.88	9.3
	5100	10.54	20.07	24.09	36.13	10.54
	5700	11.78	22.44	26.92	40.38	11.78
	6300	13.02	24.8	29.76	44.63	13.02
	6900	14.26	27.16	32.59	48.89	14.26
	7500	15.5	29.52	35.42	53.14	15.5
	8100	16.74	31.88	38.26	57.39	16.74
	8700	17.98	34.24	41.09	61.64	17.98
	9000	18.6	35.42	42.51	63.76	18.6
	9600	19.84	37.79	45.34	68.01	19.84

Notes:
1. Linear interpolation is permitted between Load Width values in the table.
2. Enclosure Case A, B, C & D are defined on sheet 1 (Patio Roof enclosure Case Table).

STEP 4.2: Uplift Load on Beam Table				
Select the correct Uplift Load based on the relevant criteria				
Wind Classification	Load Width (mm)	Case	Equals	Enter at Step 4.2
			=	

Certification

MILANOVIC NEALE
CONSULTING ENGINEERS
BRISBANE OFFICE
5/63 Annerley Road, Woolloongabba QLD 4102
PO Box 8380, Woolloongabba QLD 4102
T 07 3255 1877 F 07 3255 1878
IPSWICH OFFICE
18 Canning Street, North Ipswich QLD 4305
PO Box 218, North Ipswich QLD 4305
T 07 3281 6603 F 07 3281 6602

Andrew Morrison
RPEQ 12942

5.0 Beam Selection

Lookup Beam Load Capacities Table (kN/m)

Select the beam from the Beam Load Capacities Table below for the Wind Classification at the site (refer to building inspector if required) and the number of side enclosed under the roof (Case A to E).

Load Capacities of Beams (kN/m)																	
Beam Details		Step 5: Maximum Beam Span mm (distance between Posts)															
Step 5: Beam Type	Beam Size	1800		2400		3000		3600		4200		4800		5400		6000	
		Single Span	Multi-span	Single Span	Multi-span	Single Span	Multi-span	Single Span	Multi-span	Single Span	Multi-span	Single Span	Multi-span	Single Span	Multi-span	Single Span	Multi-span
RHS	76x38x2	7.92	7.92	4.34	4.34	2.64	2.71	1.51	1.84	0.93	1.31	0.61	0.97	0.41	0.75	-	-
	75x50x3	13.22	13.22	7.41	7.41	4.33	4.63	2.48	3.13	1.54	2.25	1.01	1.69	0.69	1.3	0.48	1.03
	100x50x3	20.7	20.7	11.6	11.6	7.4	7.4	5.1	5.1	3.2	3.8	2.1	2.9	1.5	2.3	1.1	1.8
	125x75x3	36.7	36.7	20.6	20.6	13.2	13.2	9.2	9.2	6.7	6.7	4.9	5.1	3.5	4.0	2.5	3.3
	150x50x3	39.9	39.9	22.4	22.4	14.3	14.3	9.9	9.9	7.3	7.3	5.6	5.6	4.3	4.4	3.1	3.5
	150x100x4	114.3	113.3	64.3	64.3	41.1	41.1	28.5	28.5	18	21	12.0	16.0	8.4	12.7	6.1	10.2
Timber	140x45 F7	15.0	13.0	6.6	7.3	3.4	4.7	1.9	3.2	1.2	2.2	0.8	1.5	-	1.0	-	-
	190x45 F7	27.3	23.7	15.3	13.3	8.5	8.5	4.9	5.9	3.1	4.3	2.0	3.3	1.4	2.6	1.00	1.9
	150x50 F14	19.1	16.6	10.7	9.3	6.9	6.0	4.1	4.1	2.5	3.0	1.7	2.3	1.2	1.8	0.8	1.5
	200x50 F14	34.0	29.6	19.1	16.6	12.2	10.6	8.5	7.4	6.1	5.4	4.1	4.1	2.8	3.2	2.1	2.6
	150x75 F14	28.7	25.0	16.1	14.0	10.3	9.0	6.1	6.2	3.8	4.5	2.6	3.5	1.8	2.7	1.3	2.2
	200x75 F14	51.1	44.4	28.7	25	18.4	16	12.7	11.1	9.2	8.1	6.1	6.2	4.3	4.9	3.1	4
Purlins	C15015	14.5	15.9	8.1	8.2	4.0	5.4	2.2	3.7	1.3	2.7	0.8	2.0	0.5	1.4	-	1.0
	C15019	15.7	26.4	8.8	15.8	5.6	7.6	3.0	5.3	1.7	3.7	1.1	2.6	0.7	1.9	0.5	1.4
	C20015	20.2	15.1	11.3	10.3	7.2	6.1	4.1	4.6	2.4	3.6	1.5	2.8	1.0	2.2	0.7	1.8
	C20020	29.3	28.0	16.5	18.6	10.5	10.6	5.7	7.8	3.5	5.7	2.2	4.3	1.1	3.4	1.0	2.5
Metroll A.Beam	150x65	4.6	11.6	2.3	5.7	1.37	3.43	0.75	1.76	0.48	1.21	0.35	0.86	0.23	0.53	0.17	0.43
Groove Tube	150x50x1.6	13.5	13.5	8.4	10.4	5.4	6.7	3.5	4.7	2.2	3.4	1.5	2.6	1.0	2.1	0.8	1.7
Lysaght Firmlok	F10011	7.8	6.3	4.7	4.7	2.9	3.0	1.6	2.1	1.0	1.5	-	1.1	-	-	-	-
	F15015	11.4	9.1	8.5	6.8	6.8	5.4	5	4.5	3.7	3.7	2.5	2.8	1.8	2.2	1.3	1.8
	F20020	18.2	14.5	13.6	10.9	10.9	8.7	9.1	7.2	7.3	6.2	5.6	5.4	4.4	4.4	3.5	3.6
Apollo	140x50 RFB	9.1	9.1	5.1	5.1	3.3	3.3	2.5	2.5	1.8	1.8	1.4	1.4	1.1	1.1	0.9	0.9
	170x75 RFB	20.2	16.2	13.6	12.1	8.7	8.7	6.0	6.0	4.4	4.4	3.4	3.4	2.7	2.7	2.1	2.1
Spanline	140x50 RFB	9.1	9.1	5.1	5.1	3.3	3.3	2.5	2.5	1.8	1.8	1.4	1.4	1.1	1.1	0.9	0.9
	150x60 RFB	20.3	20.3	11.0	11.0	7.0	7.0	4.8	4.8	3.6	3.6	2.7	2.7	2.2	2.2	1.7	1.7
	200x60 RFB	20.3	20.3	11.3	11.3	7.2	7.2	5.0	5.0	3.6	3.6	2.8	2.8	2.2	2.2	1.8	1.8
Shademaster	RF 125	10.0	10.0	7.5	7.5	4.75	4.75	3.2	3.25	2.0	2.3	1.3	1.8	0.75	1.45	0.55	1.1
	Maxi 175	10.0	10.0	10.0	10.0	9.0	9.0	6.25	6.25	4.5	4.5	3.5	3.5	2.75	2.75	2.0	2.25
Notes: Overhang = Span/4 max																	

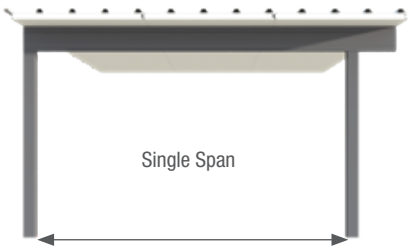

Distance between Posts

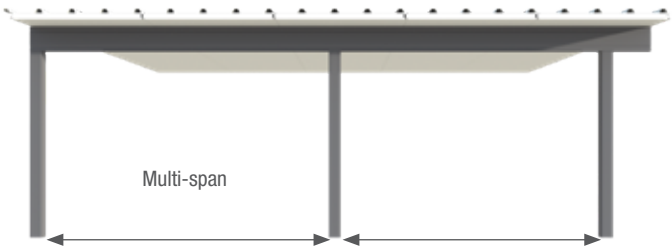

Maximum distance between Posts

STEP 5B: Beam Type Selected from Table				
Beam Type Enter at Step 5.1	Beam Size Enter at Step 5.2	Single or Multi-span Enter at Step 5.3	Distance between Posts (mm) Enter at Step 5.4	Load Capacity (kN/m) Enter at Step 5.5

Certification

MILANOVIC NEALE CONSULTING ENGINEERS

BRISBANE OFFICE
5/63 Amerley Road, Woolloongabba QLD 4102
PO Box 8380, Woolloongabba QLD 4102
T 07 3255 1877 F 07 3255 1878

IPSWICH OFFICE
18 Canning Street, North Ipswich QLD 4305
PO Box 218, North Ipswich QLD 4305
T 07 3281 6603 F 07 3281 6602

Andrew Morrison
RPEQ 12942

6.0 Posts and Footings

6.1 Post Uplift

Select Load Width on each Post, refer to diagram.

Note: Overhang C = B/4 max

Post Option B
- Multi-Span

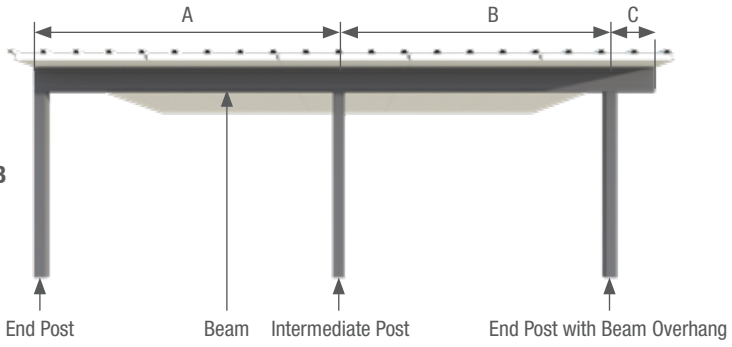

STEP 6.1B: Max Spacing between Posts				
Load Width on End Post = 0.5 x A (m)				
0.5	x	A (m)	Equals	Load Width on End Post (m) Enter at 6.1.4
0.5	x		=	

Load Width on Intermediate Post (for Multi-Span only) = 0.5 x (A+B) (m)								
A (m)	Plus	B (m)	Equals	(A+B)	x	0.5	Equals	Load Width on Intermediate Post (m) Enter at 6.1.2
	+		=		x	0.5	=	

Load Width on End Post with Beam Overhang = (0.5 x B) + C (m)								
0.5	x	B (m)	Equals	(0.5xB)	Plus	C (m)	Equals	Load Width on End Post with Beam Overhang (m) Enter at 6.1.3
0.5	x		=		+		=	

Maximum Uplift on Post (kN) = Maximum Post Load Width (m) x Uplift Load on Beam (kN/m) from Step 4.2													
Maximum	of	6.1.1 Load Width on End Post (m)	or	6.1.2 Load Width on Intermediate Post (m)	or	6.1.3 Load Width on End Post with Beam Overhang (m)		Equals	Maximum Post Load Width	x	Value from Step 4.2	Equals	Maximum Uplift on Post (kN) Enter at Step 6.1.4
MAX	(		,		,		)	=		x			

Certification
MILANOVIC NEALE CONSULTING ENGINEERS BRISBANE OFFICE 5/63 Annerley Road, Woolloongabba QLD 4102 PO Box 8380, Woolloongabba QLD 4102 T 07 3255 1877 F 07 3255 1878 IPSWICH OFFICE 18 Canning Street, North Ipswich QLD 4305 PO Box 218, North Ipswich QLD 4305 T 07 3281 6603 F 07 3281 6602 Andrew Morrison RPEQ 12942

6.2 Post to Beam Connection

For each Post, use the Uplift on Post (kN) to select the Post to Beam Connection.

BOLT SIZE TABLE						
Material	Grade	Allowable Uplift on Post (kN)				
		Thickness (mm)	1-M12	2-M12	2-M16	2-M20
Timber	JD4/J3	30	3.39	6.77	9.03	11.29
Steel	G250	2	10	20	30	40
Cold formed	G450	0.6	3.9	7.8	9.3	11.7
Steel (Firmlok)	G550	1	7.8	15.6	20.7	21.6
		2	9.3	18.6	24.8	30.2
Aluminium	6060-T4	2	3.1	6.3	8.3	10.4

STEP 6.2: Post to Beam Connection Bolt Size				
Connection Type Enter at 6.2.1	Material	Grade	Thickness	Bolt Size Enter at 6.2.2

Certification

MILANOVIC NEALE
CONSULTING ENGINEERS
BRISBANE OFFICE
5/63 Annerley Road, Woolloongabba QLD 4102
PO Box 8380, Woolloongabba QLD 4102
T 07 3255 1877 F 07 3255 1878
IPSWICH OFFICE
18 Canning Street, North Ipswich QLD 4305
PO Box 218, North Ipswich QLD 4305
T 07 3281 6603 F 07 3281 6602

Andrew Morrison
RPEQ 12942

(A) R.H.S. Post to R.H.S. Beam Joint

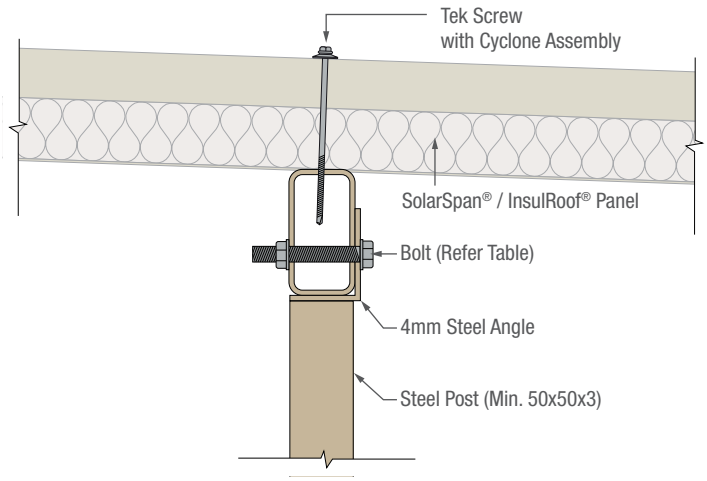

(B) Timber Post to Beam Joint

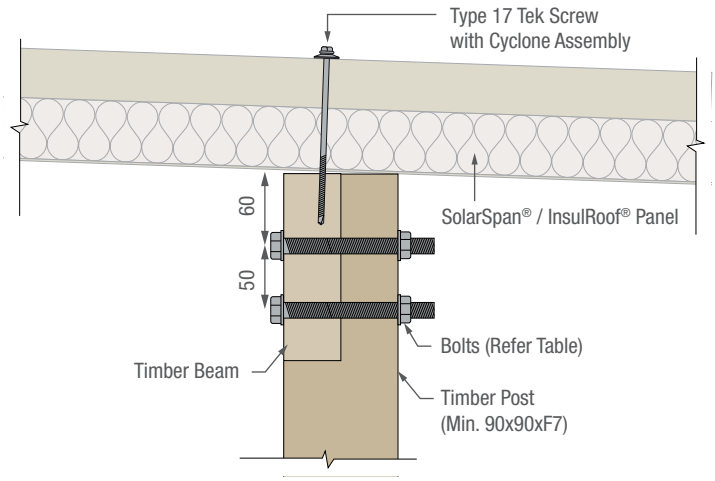

(C) Notched Post to Roll Formed Beam Joint

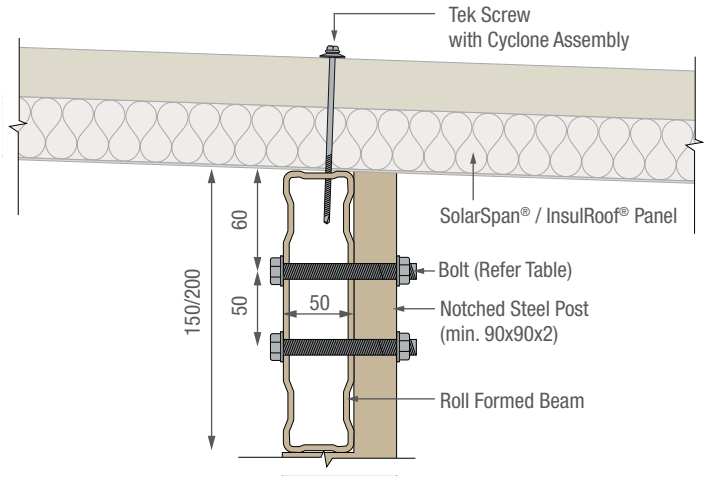

(D) Proprietary Systems

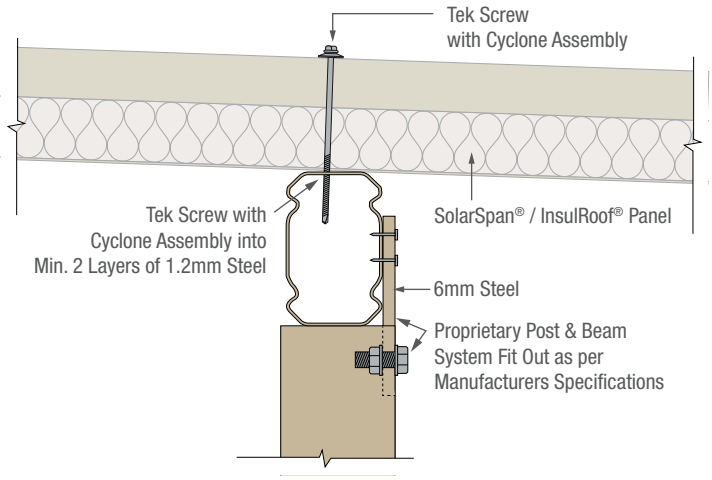

(E) Post to Roll Formed Beam Joint Concealed Fix

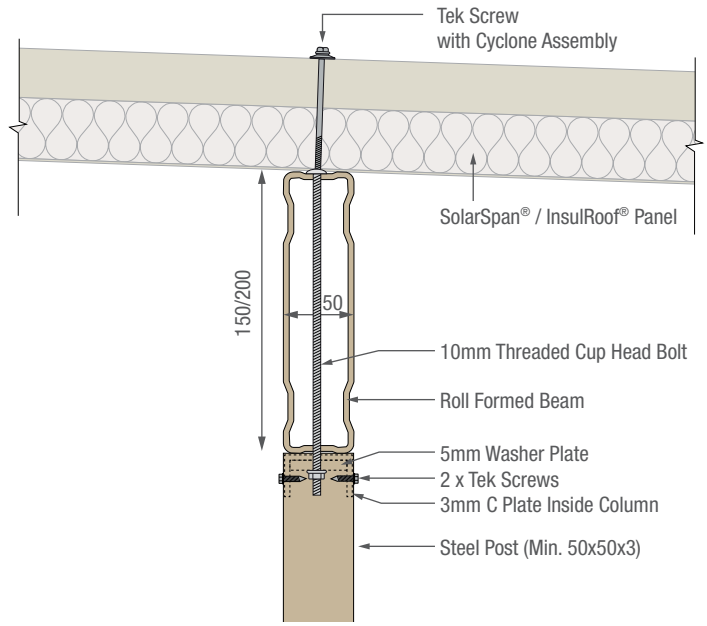

Certification

MILANOVIC NEALE
CONSULTING ENGINEERS

BRISBANE OFFICE
5/63 Annerley Road, Woolloongabba QLD 4102
PO Box 8380, Woolloongabba QLD 4102
T 07 3255 1877 F 07 3255 1878

IPSWICH OFFICE
18 Canning Street, North Ipswich QLD 4305
PO Box 218, North Ipswich QLD 4305
T 07 3281 6603 F 07 3281 6602

Andrew Morrison
RPEQ 12942

6.3 Post to Ground Connection

Use the Uplift on Post from 6.1 (kN) to select the Post to Ground connection and the footing. The hold down capacity of the footing must exceed the uplift on the Post.

In Ground Footing – Steel Column

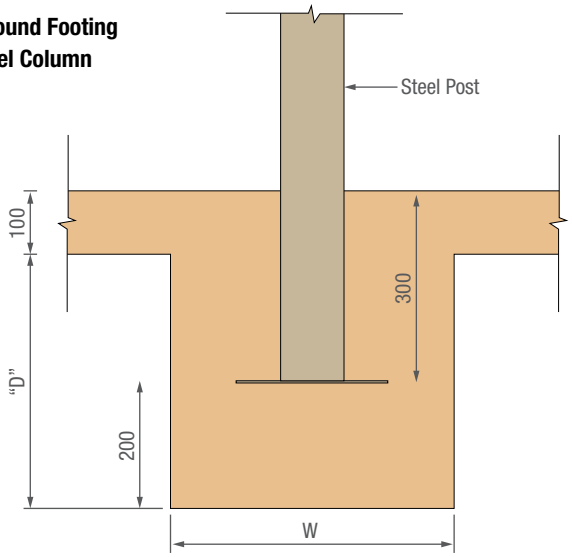

In Ground Footing – Timber Column

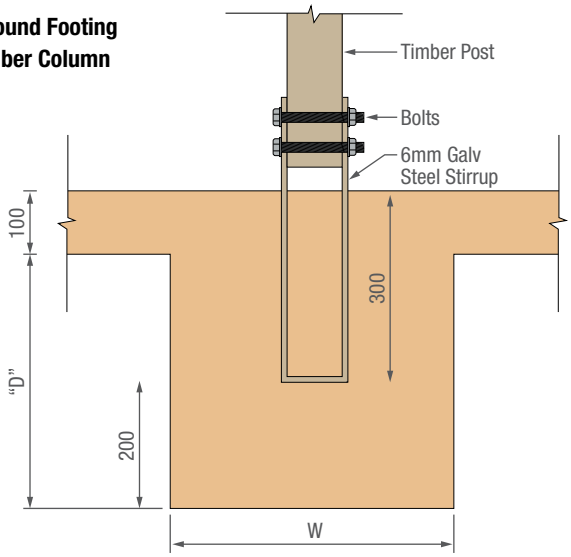

Footing with Slab Over – Steel Column

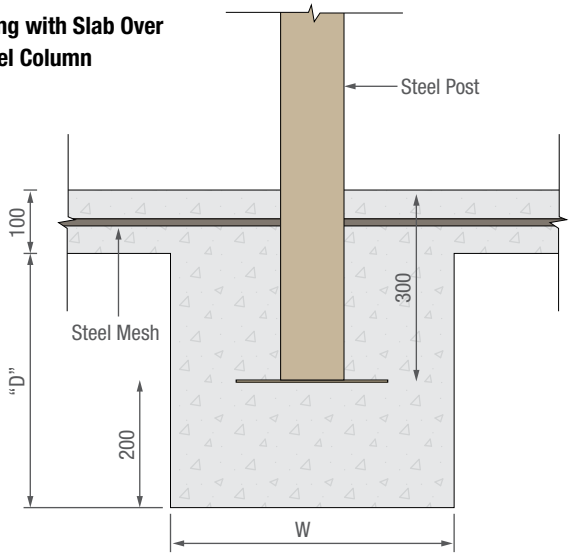

Footing with Slab Over – Timber Column

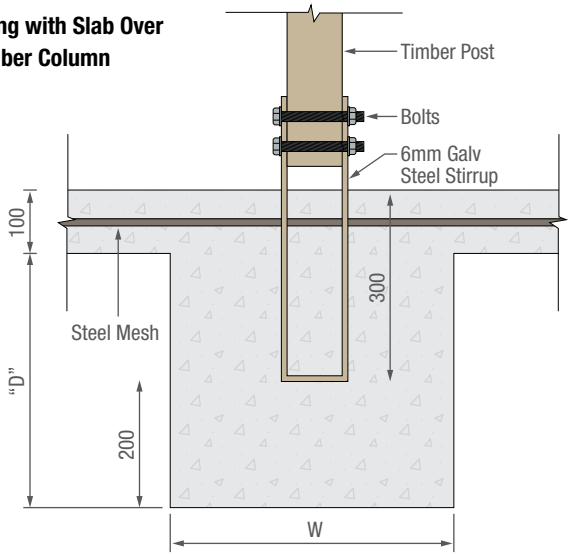

STEP 6.3: Post to Slab Connection
Connection Type Enter at 6.3

Certification

MILANOVIC NEALE
CONSULTING ENGINEERS
BRISBANE OFFICE
5/63 Annerley Road, Woolloongabba QLD 4102
PO Box 8380, Woolloongabba QLD 4102
T 07 3255 1877 F 07 3255 1878
IPSWICH OFFICE
18 Canning Street, North Ipswich QLD 4305
PO Box 218, North Ipswich QLD 4305
T 07 3281 6603 F 07 3281 6602

Andrew Morrison
RPEQ 12942

6.3 Post to Ground Connection (cont'd)

On Slab Footing
– Steel Column on Slab

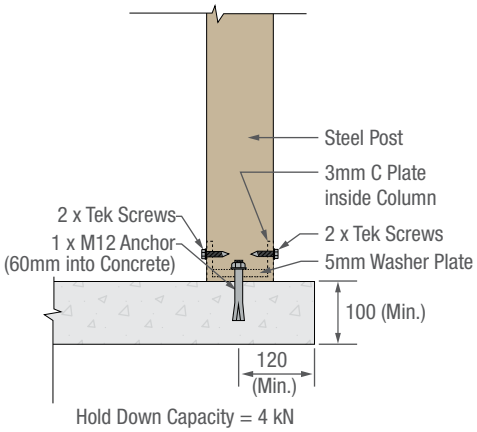

On Slab Footing
– Steel Column on Slab

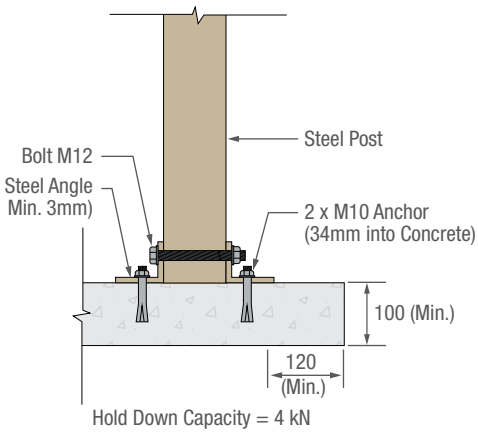

On Slab Footing
– Timber Column on Slab

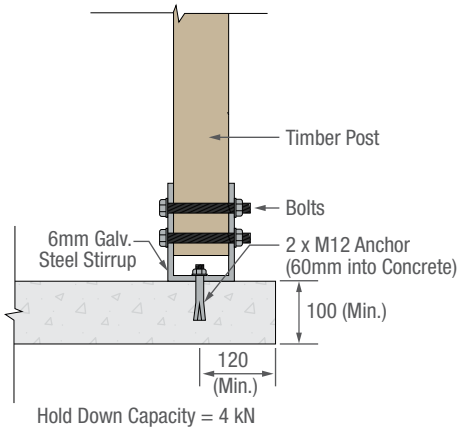

Notes:
Hold down capacity applies to piers with an undercut into cohesive clay soils. Use post footings for sandy sites.
For footings with depth (D) greater than 500, reinforce the footing with 4/N12 vertical rods tied with R6 ligs at 500 CRS.
Concrete slab must be a minimum of 100mm thick, 20Mpa concrete reinforced with SL72 mesh and must extend for the full area covered by the SolarSpan® or InsulRoof® roof.

IN GROUND FOOTING (CLAY SOIL) W = 450mm DIA.		
Hold Down Capacity (kN)	Footing without Slab Over - Depth D (mm)	Bolts/DIA. (mm)
3.5	500	2/M10 or 1/M12
8.5	750	2/M12 or 1/M16
14.0	1000	2/M16
22.0	1250	2/M20

FOOTING WITH SLAB OVER (CLAY SOIL) W = 450mm DIA.	
Hold Down Capacity (kN)	Footing with Slab Over - Depth D (mm)
15.0	500
19.5	750
23.5	1000
27.0	1250

POST FOOTINGS (SANDY SITES)							
Hold Down Capacity (kN)	Width "W" & Depth "D" (mm)						
	500	550	600	650	700	750	800
5	700 x 700 x 500 DEEP	650 x 650 x 550 DEEP	650 x 650 x 600 DEEP	600 x 600 x 650 DEEP	600 x 600 x 700 DEEP	600 x 600 x 750 DEEP	550 x 550 x 800 DEEP
10	1000 x 1000 x 500 DEEP	950 x 950 x 550 DEEP	900 x 900 x 600 DEEP	850 x 850 x 650 DEEP	850 x 850 x 700 DEEP	800 x 800 x 750 DEEP	800 x 800 x 800 DEEP
15	1200 x 1200 x 500 DEEP	1150 x 1150 x 550 DEEP	1100 x 1100 x 600 DEEP	1050 x 1050 x 650 DEEP	1000 x 1000 x 700 DEEP	1000 x 1000 x 750 DEEP	950 x 950 x 800 DEEP
20	1400 x 1400 x 500 DEEP	1300 x 1300 x 550 DEEP	1250 x 1250 x 600 DEEP	1200 x 1200 x 650 DEEP	1200 x 1200 x 700 DEEP	1150 x 1150 x 750 DEEP	1100 x 1100 x 800 DEEP
25	1550 x 1550 x 500 DEEP	1500 x 1500 x 550 DEEP	1400 x 1400 x 600 DEEP	1350 x 1350 x 650 DEEP	1300 x 1300 x 700 DEEP	1250 x 1250 x 750 DEEP	1250 x 1250 x 800 DEEP
30	1700 x 1700 x 500 DEEP	1600 x 1600 x 550 DEEP	1550 x 1550 x 600 DEEP	1500 x 1500 x 650 DEEP	1450 x 1450 x 700 DEEP	1400 x 1400 x 750 DEEP	1350 x 1350 x 800 DEEP

STEP 6.3: Post to Slab Connection
Connection Type Enter at 6.3

Certification
MILANOVIC NEALE CONSULTING ENGINEERS BRISBANE OFFICE 5/63 Annerley Road, Woolloongabba QLD 4102 PO Box 8380, Woolloongabba QLD 4102 T 07 3255 1877 F 07 3255 1878 IPSWICH OFFICE 1B Canning Street, North Ipswich QLD 4305 PO Box 218, North Ipswich QLD 4305 T 07 3281 6603 F 07 3281 6602 Andrew Morrison RPEQ 12942

7.0 Patio to House Connection

Select the type of patio to house connection based on the Uplift Force (kN/m).

Notes:

1. Refer to Section 4.2 Uplift Load on Beam Table. For Load Width 0.5A, select the uplift (kN/m) from the table. This value is the Uplift Load on the house.
2. Select a suitable house connection for the required kN/m uplift.
3. The uplift capacity of the house fascia connections apply to the SolarSpan® & InsulRoof® Receiver Channel connection only. The Load Capacity and suitability of the members and connections below the rafter are to be assessed and strengthened if required.
4. It is the responsibility of the builders and engineers to determine the capacity of the existing structures.

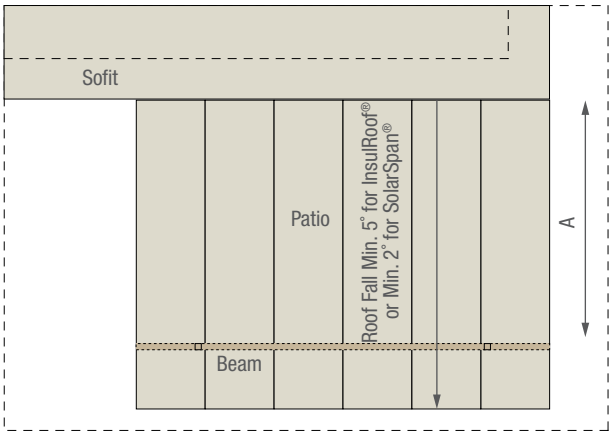

7.1 For Metal Fascias

UPLIFT CAPACITY OF RECEIVER CHANNEL TO RAFTER CONNECTION (kN/m)		
Rafter Connection Spacing (mm)	Unstrengthened Rafter	Strengthened Rafter
600	3	6
900	2	4
1200	1.5	3

Rafter Strengthening

Fix timber stiffener 90x35 F8 x 1500 long to rafter with 75 long x No.14 Type 17 batten screws at 300 CRS (not shown here).

Unstrengthened Rafter with Universal Bracket

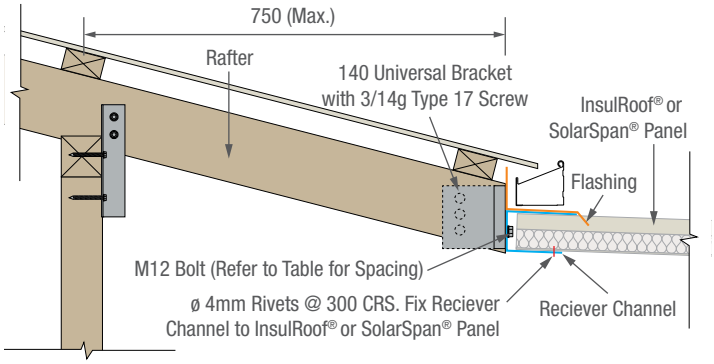

Strengthened Rafter with Stiffener

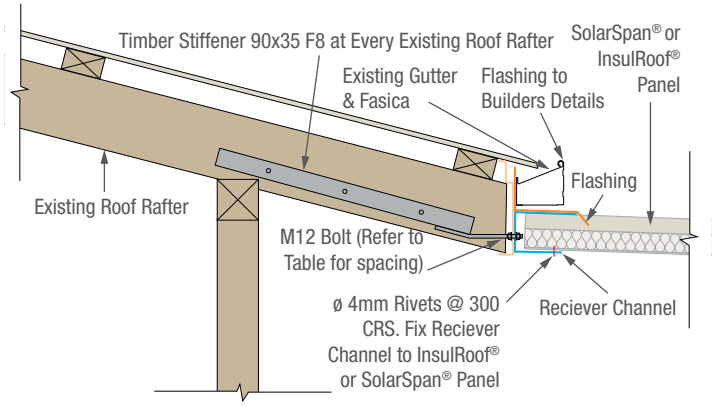

7.2 For Timber Fascias

Notes:

1. Refer to AS 1684 - Timber Framing Code for attaching pergola or carport to house.
2. Connect SolarSpan & InsulRoof Receiver Channel as per carport/pergola as shown in that publication.
3. Alternatively, connect as for Metal Fascias above.

STEP 7: Patio to House Connection
Connection Type Enter at 7

Certification

MILANOVIC NEALE
CONSULTING ENGINEERS
BRISBANE OFFICE
5/63 Annerley Road, Woolloongabba QLD 4102
PO Box 8380, Woolloongabba QLD 4102
T 07 3255 1877 F 07 3255 1878
IPSWICH OFFICE
18 Canning Street, North Ipswich QLD 4305
PO Box 218, North Ipswich QLD 4305
T 07 3281 6603 F 07 3281 6602

Andrew Morrison
RPEQ 12942

7.3 Offset Post for Application with Higher Uplift

Offset Vertical Column Spacing (mm)	Uplift Capacity of Receiver Channel Connection (kN/m)
3000	1.3
2400	1.6
1800	2.2

Notes:

1. Alternative is to install 50x3.0 SHS Post directly under the 3.0mm Steel Channel with similar fixings.
2. Where the conditions in Section 7.2 are met, the Uplift Capacity (kN/m) from Section 7.2 may be added to the applicable Uplift Capacity (kN/m) from Section 7.3 above.
3. Fix SolarSpan® & InsulRoof® Receiver Channel to 3.0mm Steel Channel at 300 CRS.

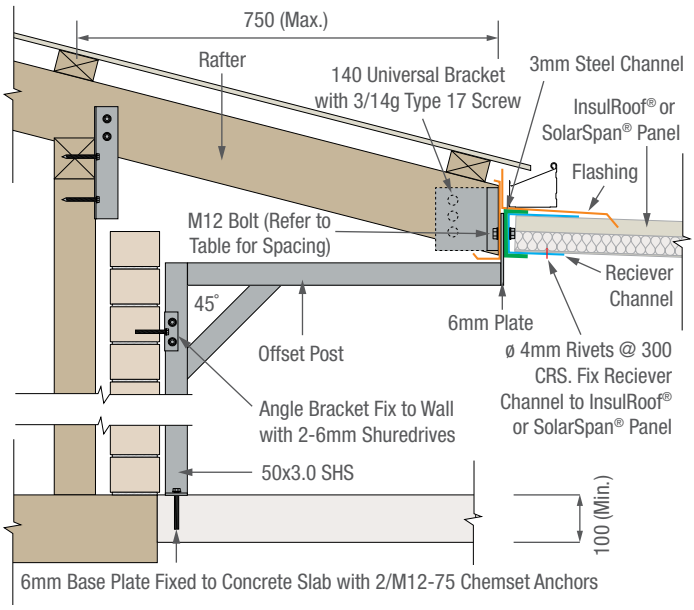

7.4 Removed Fascia & Soffit

Rafter Spacing (mm)	Uplift Capacity of Receiver Channel to Rafter Connection (kN/m)
600	6
900	4
1200	3

Notes:

1. Cut back rafter tails as shown.
2. Fix new fascia to each rafter tail with 2-75mm batten screws.
3. Fix SolarSpan® & InsulRoof® Receiver Channel to fascia with No.14 Type 17 screws at 300 CRS.

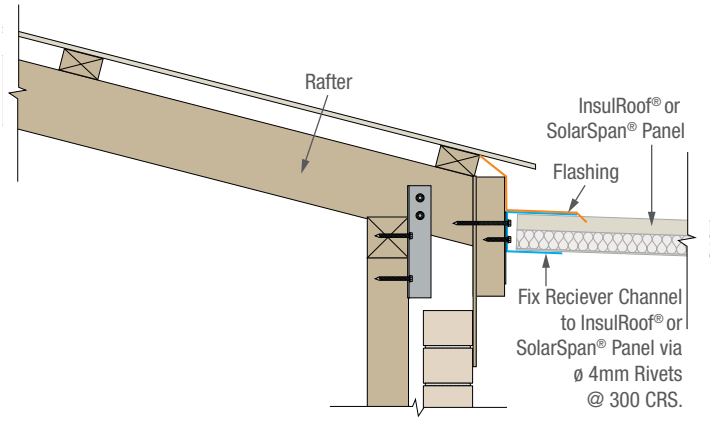

7.5 Brick / Masonry Wall

Shuredrives Spacing (mm)	Uplift Capacity of Receiver Channel to Wall Connection (kN/m)
300	2.5
200	3.5

Notes:

Do not attach brickwork with less than 1.5m of brickwork over unless brickwork is positively tied down with anchor rods. Otherwise separate tie-down structure is required.

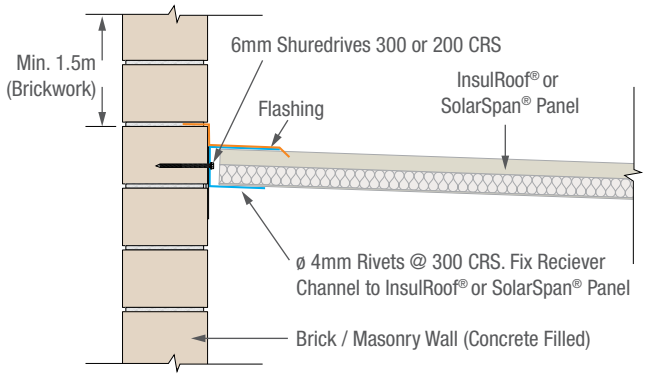

Certification

MILANOVIC NEALE
CONSULTING ENGINEERS
BRISBANE OFFICE
5/63 Amerley Road, Woolloongabba QLD 4102
PO Box 8380, Woolloongabba QLD 4102
T 07 3255 1877 F 07 3255 1878
IPSWICH OFFICE
18 Canning Street, North Ipswich QLD 4305
PO Box 218, North Ipswich QLD 4305
T 07 3281 6603 F 07 3281 6602

Andrew Morrison
RPEQ 12942

7.6 SolarSpan® Fastener Details

Minimum Screw Length for SolarSpan ® Fixings to Beam - All Screws Class 4		
Panel Thickness (mm)	Timber Beam Type 17 14-10 with Cyclone Assembly. Timber joint to be joint group J3 or better. (Min Embedment 35mm)	Steel Beam Metal Tek 14-14 with Cyclone Assembly. (Min steel thickness 1.5mm)
	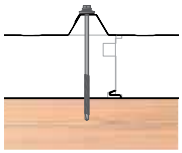	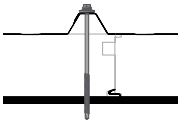
50	125mm	125mm
75	150mm	150mm
100	175mm	175mm
125	200mm	205mm
150	240mm	230mm
200	300mm	300mm

Fixing Recommendations

SolarSpan® roofing side laps should be laid away from the prevailing wind and sit neatly on the preceding roof sheet. Refer to SolarSpan® Patio Engineering for fixing details. Fascia gutter flashings should be fixed using sealed rivets in the valley.

Non Cyclonic Fixing - Through Each Rib

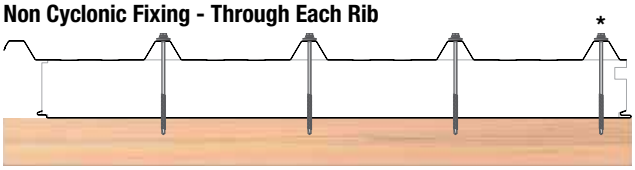

Cyclonic Fixing - Through Each Rib and Pan

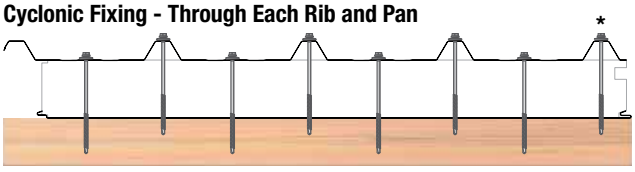

* Fixing to go through adjacent panel's side lap.

Screw with Cyclone Assembly

Lapping

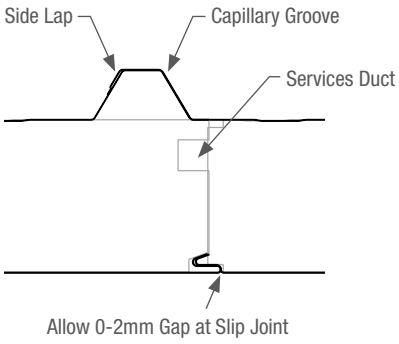

Number of Fixings Required	
Uplift Load on Beam	Fixing Required
up to 7.2 kN/m (up to 5.9 kN/m for Firmlok F10011)	a) One screw with cyclone assembly per panel rib
up to 14.4 kN/m	Screws as per (a) above, plus one screw with cyclone assembly per pan (between ribs)
up to 21.6 kN/m	Screws as per (a) above, plus two screw with cyclone assembly per pan (between ribs)

SolarSpan® Naturelite® Skylight

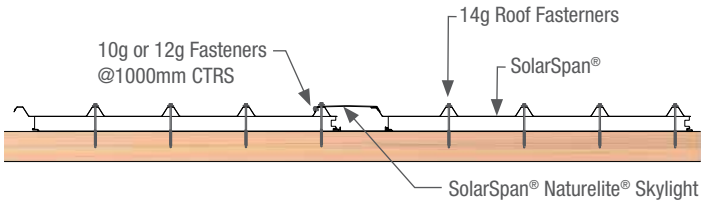

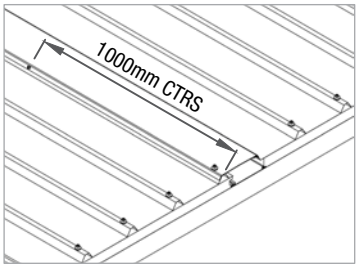

Certification

MILANOVIC NEALE
CONSULTING ENGINEERS
BRISBANE OFFICE
5/63 Annerley Road, Woolloongabba QLD 4102
PO Box 8380, Woolloongabba QLD 4102
T 07 3255 1877 F 07 3255 1878
IPSWICH OFFICE
18 Canning Street, North Ipswich QLD 4305
PO Box 218, North Ipswich QLD 4305
T 07 3281 6603 F 07 3281 6602

Andrew Morrison
RPEQ 12942

7.6 InsulRoof® Fastener Details

Minimum Screw Length for InsulRoof ® Fixings to Beam - All Screws Class 4		
Panel Thickness (mm)	Timber Beam Type 17 14-10 with Cyclone Assembly. Timber joint to be joint group J3 or better. (Min Embedment 35mm)	Steel Beam Metal Tek 14-14 with Cyclone Assembly. (Min steel thickness 1.5mm)
	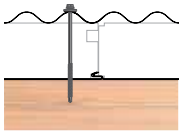	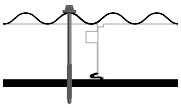
50	100mm	125mm
75	125mm	125mm
100	175mm	150mm
125	200mm	175mm
150	240mm	205mm
200	300mm	300mm

InsulRoof® Fixings Requirements																																						
Span (mm)	Wind Category:						N2					N3					N4					C1					C2					C3				
	Region:	A	B	C	D	E	A	B	C	D	E	A	B	C	D	E	A	B	C	D	E	A	B	C	D	E	A	B	C	D	E	A	B	C	D	E
2000		4					4					4	4	4	4	4	4	4	4	4	4	4	4	4	4	4	4	4	4	4	4	4	4	4	4	4
3000												4	4	4	4	4	4	4	4	4	4	4	4	4	4	4	4	4	4	4	4	4	4	4	4	4
4000												4	4	4	4	4	4	4	4	4	4	4	4	4	4	4	4	4	4	4	4	4	4	**7**	**7**	4
5000												4	4	4	4	4	4	4	4	**7**	4	4	4	4	4	4	4	4	4	**7**	4	4	**7**	**7**	**7**	4
6000												4	4	4	4	4	4	4	7	**7**	4	4	4	4	4	4	4	4	**7**	**7**	4	4	**7**	**7**	**7**	4
7000												4	4	4	**7**	4	4	**7**	**7**	**7**	4	4	4	4	**7**	4	4	**7**	**7**	**7**	4	4	**7**	**7**	**13**	4
8000												4	4	4	**7**	4	4	**7**	**7**	**7**	4	4	4	4	**7**	4	4	**7**	**7**	**7**	4	**7**	**7**	**13**	**13**	4
9000												4	4	7	**7**	4	4	**7**	**7**	**13**	4	4	4	**7**	**7**	4	4	**7**	**7**	**13**	4	**7**	**13**	**13**	**13**	**7**

Number of Fixings Required		
Note	Uplift Load on Beam	Fixing Required
4	up to 7.2 kN/m (up to 5.9 kN/m for Firmlok F10011)	4 fixings with cyclone assembly per panel (minimum every 3rd crest)
7	up to 14.4 kN/m	7 fixings with cyclone assembly per panel (minimum every 2nd crest)
13	up to 21.6 kN/m	13 fixings with cyclone assembly per panel (every crest)

Fixing Recommendations

The InsulRoof® side lap should be laid away from the prevailing wind and sit neatly on the preceding roof sheet. Use Bondor® recommended insulated roofing fasteners along with cyclone assembly fixed as specified in the InsulRoof® patio engineering. Fix side laps at approximately 1000mm centres using a M6-11x25mm Hex Head Roof Zips screw (available from Bondor®). Fascia gutter flashings should be fixed using sealed rivets in the valley.

Lapping

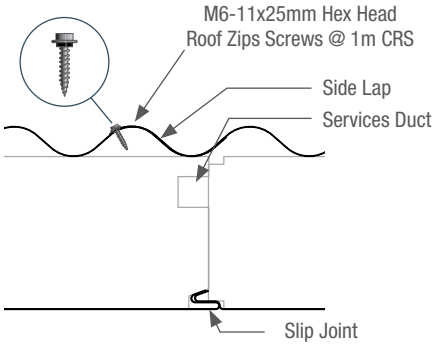

4 Fixings - Minimum Through Every 3rd Crest

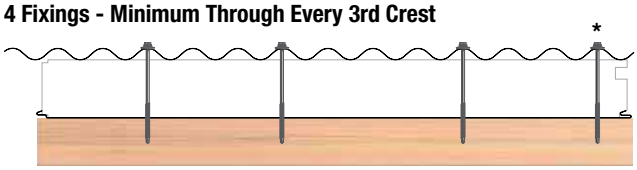

7 Fixings - Minimum Through Every 2nd Crest

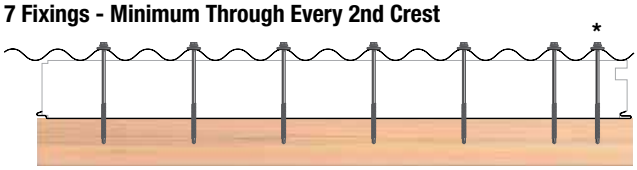

13 Fixings - Through Every Crest

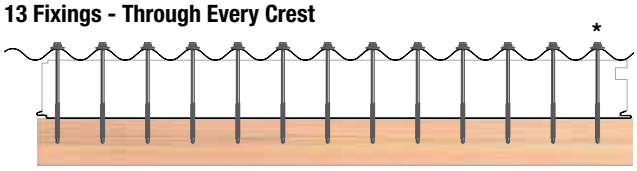

* Fixing to go through adjacent panel's side lap.

Certification

MILANOVIC NEALE
CONSULTING ENGINEERS
BRISBANE OFFICE
5/63 Annerley Road,Woolloongabba QLD 4102
PO Box 8380,Woolloongabba QLD 4102
T 07 3255 1877 F 07 3255 1878
IPSWICH OFFICE
18 Canning Street,North Ipswich QLD 4305
PO Box 218,North Ipswich QLD 4305
T 07 3281 6603 F 07 3281 6602

Andrew Morrison
RPEQ 12942

8.0 Gable Structures

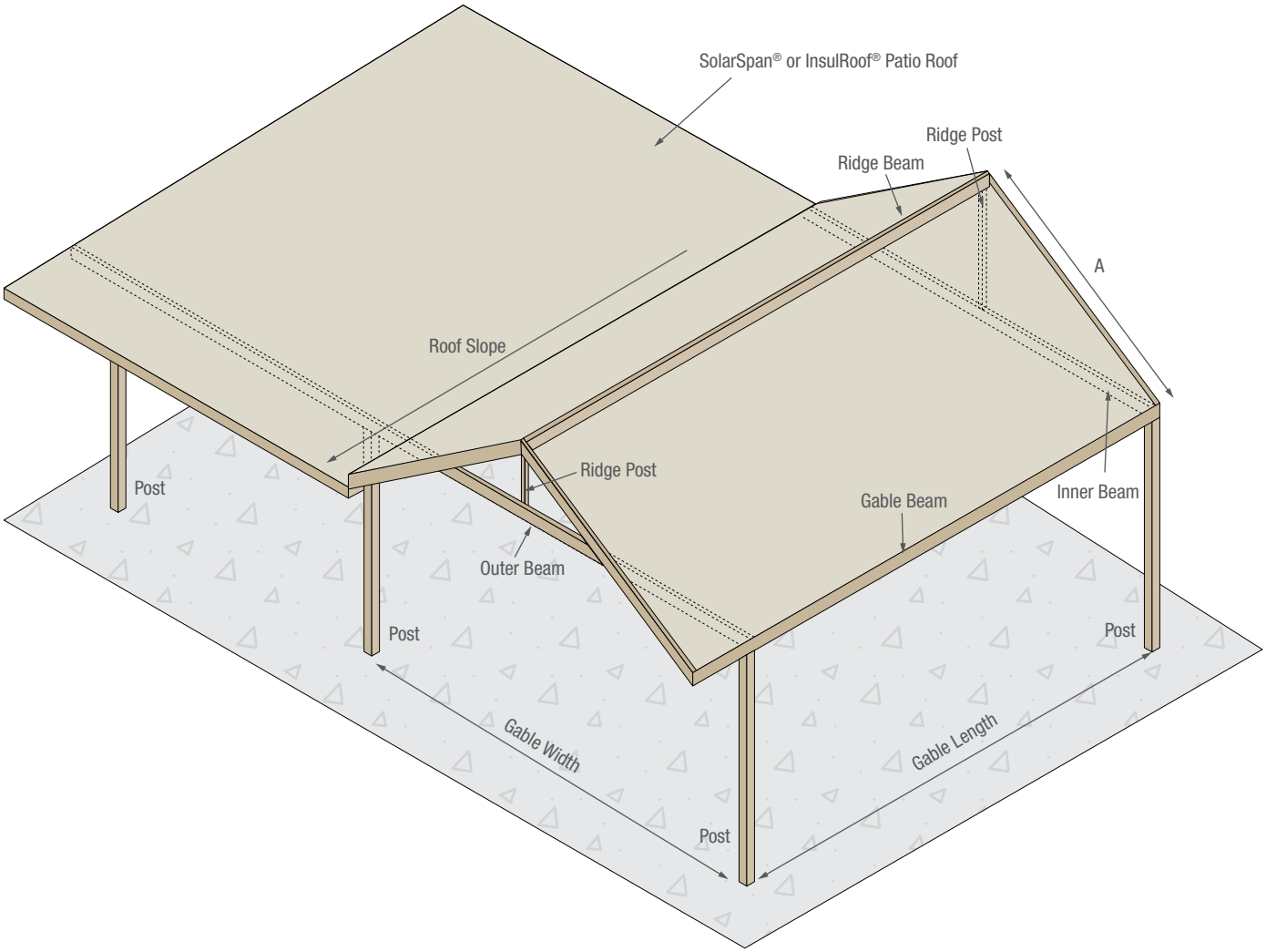

8.1 Thickness and Fixings

Selected as for the rest of the patio (refer to Step 3).

8.2 Select Outer Beam

This will normally be the same beam as the outer beam in the low pitch part of the patio.

8.3 Select Gable Beams

Load Width on Gable = 0.5 A metres. Use the same procedure as set out on Step 4 & 5 to select a suitable beam size.

STEP 8: Gable Span Formula								
Load Width on Gable = 0.5 x A metres Load on ridge beam (kN/m) = 2 x load on gable beam (kN/m)								
0.5	x	A (m)	Equals	(0.5xA)	x	2	Equals	Load on ridge beam (kN/m) Enter at Step 8
0.5	x		=		x	2	=	

Certification

MILANOVIC NEALE
CONSULTING ENGINEERS
BRISBANE OFFICE
5/63 Annerley Road, Woolloongabba QLD 4102
PO Box 8380, Woolloongabba QLD 4102
T 07 3255 1877 F 07 3255 1878
IPSWICH OFFICE
18 Canning Street, North Ipswich QLD 4305
PO Box 218, North Ipswich QLD 4305
T 07 3281 6603 F 07 3281 6602

Andrew Morrison
RPEQ 12942

8.4 Check the Capacity of the Ridge Beam

8.4.1 Load on Ridge Beam

Load on ridge beam (kN/m) = 2 x load on gable beam (kN/m).

8.4.2 Check Capacity

Check that the capacity (kN/m) of the Ridge Beam has sufficient capacity for the particular conditions by referring to the selection table in Section 5.0.

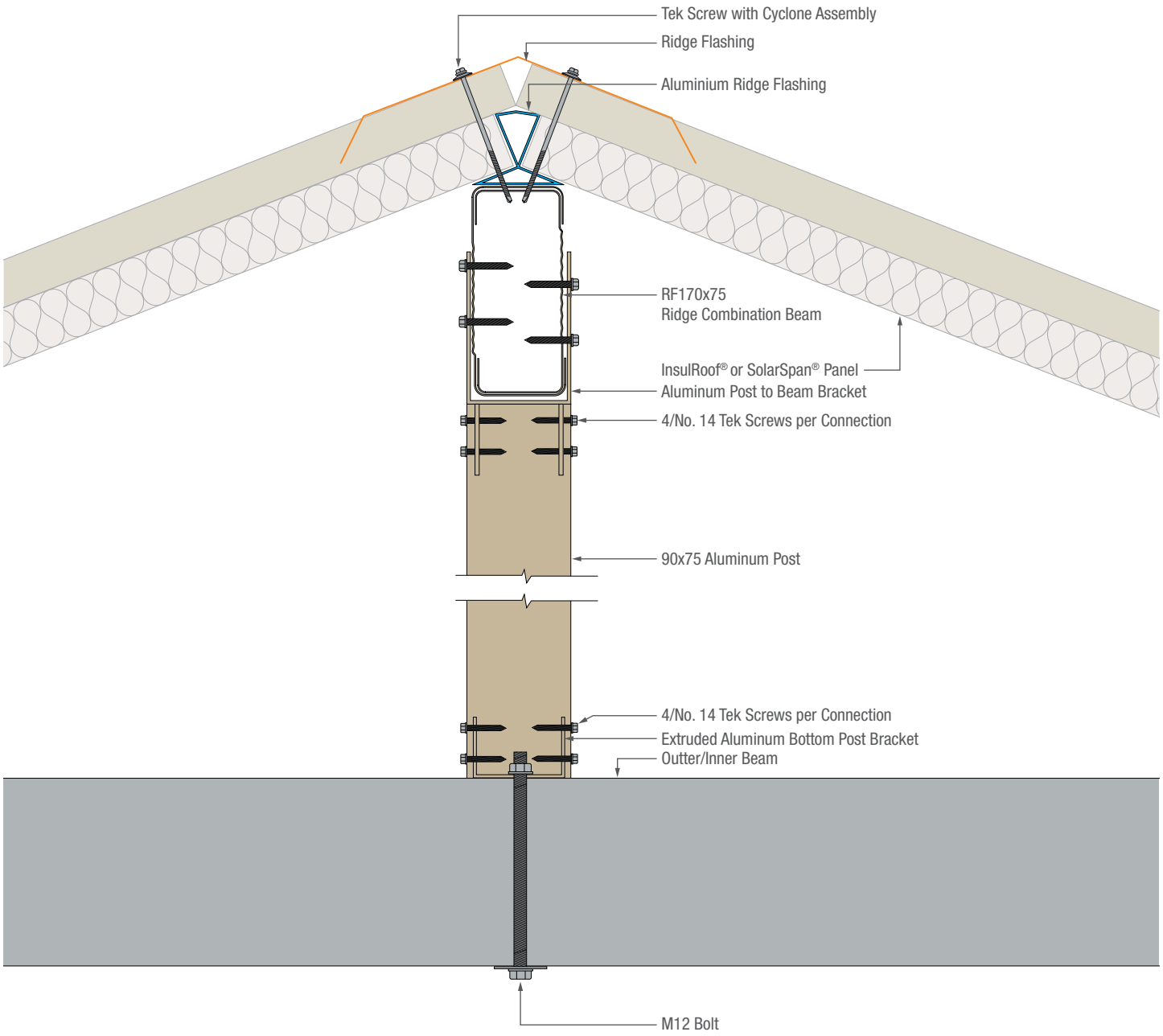

Certification

MILANOVIC NEALE
CONSULTING ENGINEERS
BRISBANE OFFICE
5/63 Annerley Road, Woolloongabba QLD 4102
PO Box 8380, Woolloongabba QLD 4102
T 07 3255 1877 F 07 3255 1878
IPSWICH OFFICE
18 Canning Street, North Ipswich QLD 4305
PO Box 218, North Ipswich QLD 4305
T 07 3281 6603 F 07 3281 6602

Andrew Morrison
RPEQ 12942

9.0 Enclosure Wall Panel

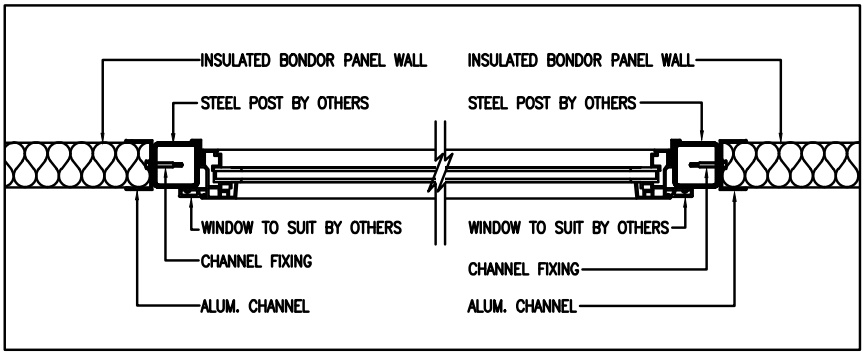

SECTION 1

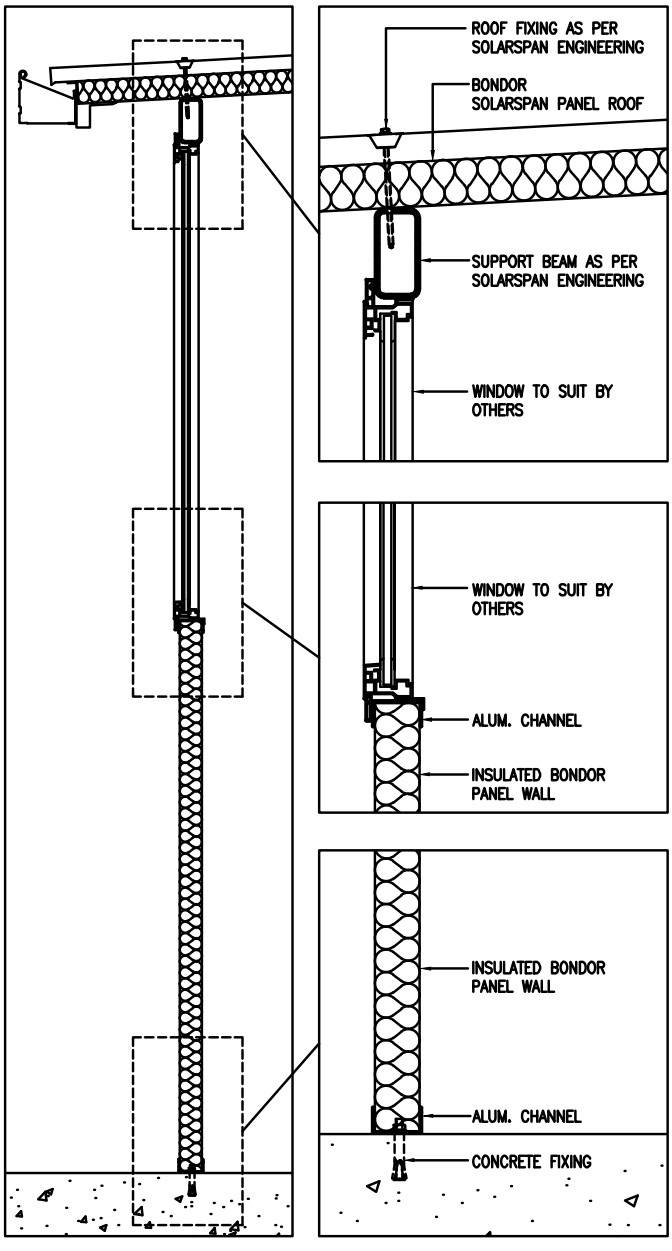

SECTION 2

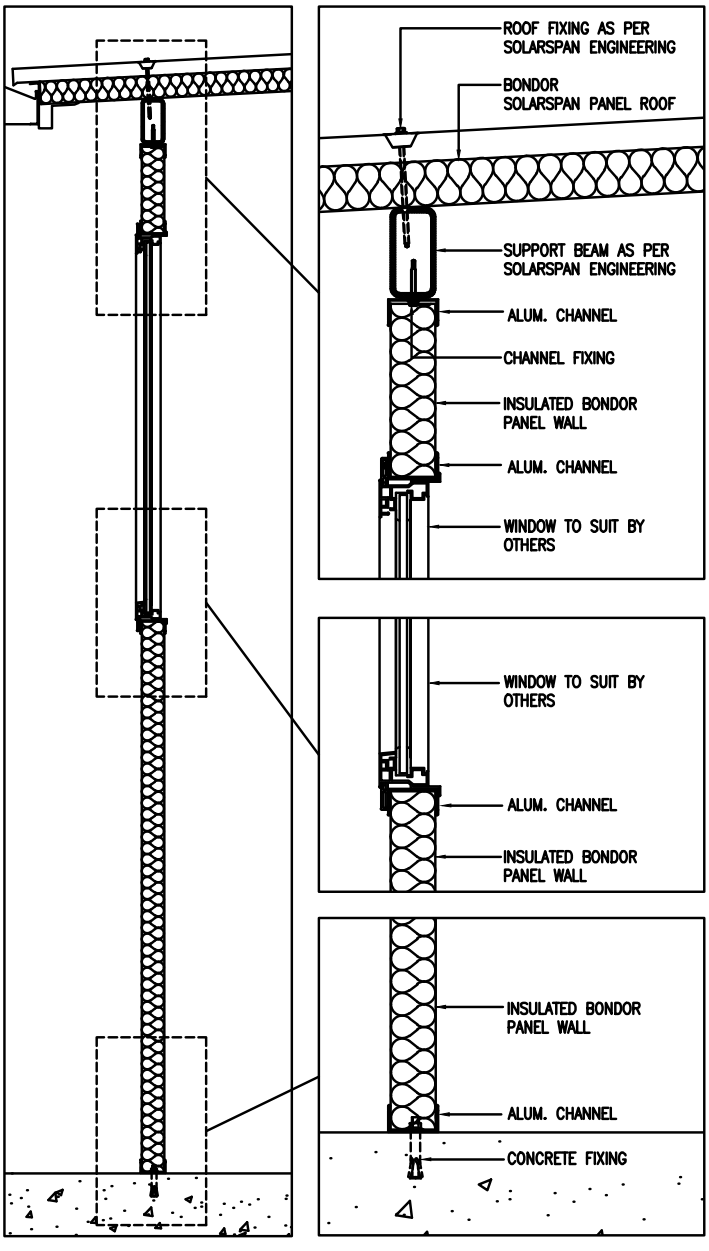

SECTION 3

9.0 Enclosure Wall Panel (cont'd)

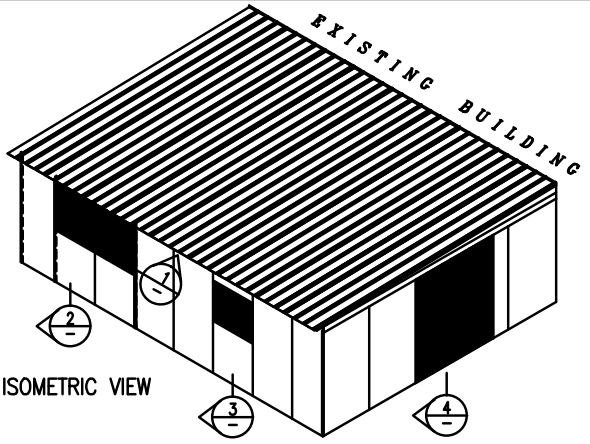

ISOMETRIC VIEW

THE LAYOUT OF DOOR AND WINDOWS SHOWN HERE IS INDICATIVE ONLY, ANY COMBINATION OF DOORS, WINDOWS AND BONDOR PANEL IS POSSIBLE WITHIN THE CONSTRAINTS OF THE WIND LOAD APPLICABLE.

WINDOWS AND DOORS FITTED TO MANUFACTURERS SPECIFICATIONS.

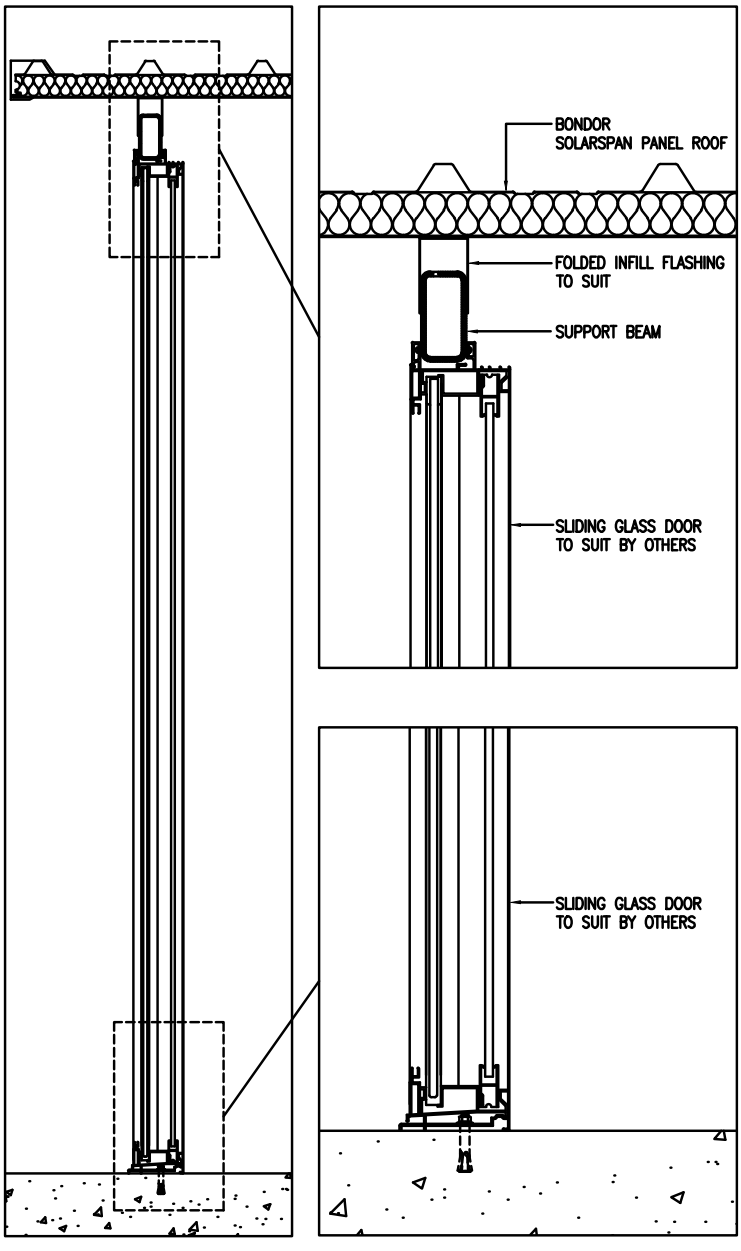

SECTION 4

BONDOR®

Leaders in Thermal & Architectural Building Solutions

www.bondor.com.au

1300 300 099

BRISBANE/EXPORT
103 Ingram Road, Acacia Ridge, QLD 4110
Ph: (07) 3323 8500 Fax: (07) 3323 8501

ADELAIDE
70-72 Rundle Road, Salisbury South, SA 5106
Ph: (08) 8282 5000 Fax: (08) 8282 5099

LAUNCESTON
7 Connector Park Drive, Kings Meadows, TAS 7249
Ph: (03) 6335 8500 Fax: (03) 6335 8544

PERTH
17 Gauge Circuit, Canning Vale, WA 6155
Ph: (08) 9256 0600 Fax: (08) 9256 0620

MELBOURNE
6 Dunmore Drive, Truganina, VIC, 3029
Ph: (03) 8326 8000 Fax: (03) 8326 8099

SYDNEY
49-53 Newton Road, Wetherill Park, NSW 2164
Ph: (02) 9609 0888 Fax: (02) 9729 1114

** Limited availability. ^ Darker colours warranted for use in limited regions. Metecno Pty Limited. ABN 44 096 402 934. The manufacturer reserves the right to change the specification without notice. Bondor®, DesignerWall® and Metecno are trademarks of Metecno Pty Limited. BlueScope, Colorbond® and colour names are trademarks of BlueScope Steel Limited. The colours shown in this publication have been reproduced to represent actual product colours as accurately as possible. However, given printing limitations, we recommend checking your chosen colour against an actual sample before placing orders. This advice is of a general nature only. Designers must provide for adequate structural performance and other Building Code requirements. This information is subject to change. Refer to Bondor® website for latest version. Consult Bondor® for your application. SolarSpan® & InsulRoof® Patio Engineering Guide v5 12/05/2020